BOURGAULT
TILLAGE TOOLS

2024

PRODUCT
CATALOGUE

SEEDING & FERTILIZER OPENERS | TILLAGE TOOLS | SPECIALTY PARTS

NEW! Products Added

Single Shoot Seed Opener Gumbo Knife to fit Bourgault PLDS
Page 26

Paired Row Seeding Opener to fit Bourgault PLDS
Page 27

Seeding Knife Less disturbance to fit Bourgault PLX, PLS, XTC, QDA
Page 28

Bourgault TriMax™ Triple Shoot System Opener
Page 31

***Speed-Loc™* Fertilizer Knives**
Page 69

1/2" Fertilizer Knives to fit C-shank
Page 75

***Max Life™* Weldable Wear Strips new size options**
Page 109

TRY BEFORE YOU BUY!

BTT Demo Program

Through the BTT Demo Program, we offer you the opportunity to try a few of our parts and compare how they perform against products you're currently using.

No pressure. No obligation to buy.

Share Your Experience

Customer feedback is important and if you're running BTT products you may have some thoughts to share! Hearing what our customers think provides valuable insight on what we're doing right, where we can improve, and what new opportunities we should explore.

Fill in our short customer feedback form and your name is also entered into our monthly draw for BTT swag!

A member of our team may contact you using the information you provide to further discuss your comments.

Access The Feedback Form

Fill out the short feedback form online by visiting tillagetools.ca/company/customer-feedback/

OR

Scan the QR code below.

1. Open the camera app on your smart phone.
2. Point your phone at the QR code and hold steady for a few seconds to scan it.
3. When a notification appears at the top of your screen, tap on it. This will take you to the online entry form.
4. If a notification doesn't appear, go to Settings on your phone, enable QR code scanning under Camera, and then scan the QR code again.

SCAN USING YOUR SMART PHONE CAMERA

Contents

COMPANY PROFILE	**4-9**
REPLACEABLE TIPS	
SINGLE SHOOT	12-13
PAIRED ROW	14-15
SIDE BAND	16
FERTILIZER	17
PRECAUTIONS & RISK FACTORS	**18**
OPENERS TO FIT	
C-SHANK	
SEEDING OPENERS	20-25
FERTILIZER KNIVES	70-73
BOURGAULT	26-32
CASE, NEW HOLLAND & FLEXI-COIL	33-35
HORSCH	36-39
JOHN DEERE	40-42
MORRIS	44-49
SALFORD	50
SEED MASTER	51
VÄDERSTAD SEED HAWK	52-54
SPEED-LOC™	
SEEDING OPENERS	60-63
FERTILIZER KNIVES	68-71
FERTILIZER KNIVES	**68-76**
MULTI-SHOOT OPENERS	
TITAN OPENER SYSTEM	56-57
VOS	58-59
SEED BOOTS	**64-65**
***SPEED-LOC™* ADAPTERS**	**78-79**
ACCESSORIES, DRIVERS & REPLACEMENT PARTS	80-81
ADAPTER CHART	82-83
TILLAGE	
SPEED-LOC™ SWEEPS & SPIKES	86-89
BOLT-ON SWEEPS, SPIKES & CHISELS	90-91
MAX LIFE™ SWEEPS & SPIKES	92
CAST SWEEPS & CHISEL PLOW POINTS	93
DEEP RIPPERS	94-95
SHANK SAVERS & NUGGETS	96
MAX LIFE™ SCRAPERS	97
MAX LIFE™ HARROW TINES	98-101
PREMIUM LINE - *NIAUX* 200 DISK BLADES	103-108
STANDARD LINE - 150 SERIES DISK BLADES	108
SPECIALTY PRODUCTS	
WELDABLE WEAR STRIPS	109-110
THRESHING PIN	111
MANURE SPREADER WEAR TIPS	111
POWER HILLER TINES	112
ACCESSORIES & REFERENCE	
ACCESSORIES	114-115
INSTALLATION NOTES	116-117
BOLT LENGTH & FASTENER CHARTS	118-121
PRODUCT DEPTH CHART	122
EXPANDED ASSEMBLIES	123-137
PRODUCT INDEX	**138-139**

Ryan Olson
General Manager

Joseph Bourgault
President

Empowering the Future: Elevating Quality, Innovation, & Efficiency Through Collaborative Excellence

On behalf of our team at Bourgault Tillage Tools, we want to thank our customers including farmers, dealers, distributors, and equipment manufacturers. Your support has inspired our company to develop several new differentiated and innovative products that will ultimately lead to improved performance and cost advantages for farmers across the world.

Our modest company, based in the small rural town of St. Brieux, Saskatchewan, has continued a journey of growth this year. Our success has been attributed to our focus on Team Spirit, Quality, Innovation, Customer Focus and Efficiency.

Team Spirit

There is a lot to be proud of when speaking about the 84 company associates who work at Bourgault Tillage Tools. Our company culture has been developed over 30 years, and customers who have toured our facility are quick to recognize the teamwork and attention to detail that goes into every part we manufacture. Hanging on a sign at the entrance to our production floor is the company core values of Safety, Quality and Efficiency. Values that are so important to our team that customers routinely comment about the positive demeanor of employees, the cleanliness of our facilities, and the surprising mix of people and automation that it takes to create our products. Our objective is to continue to make our company an ideal location for people to work, and we value and respect team members and their contribution to the success of our company.

Quality

Perhaps one of the most recognizable features of our products is how long they last even in the toughest conditions. This is because we value our customers' feedback and ensure that every design solves their problems. Our team prides themselves on producing high quality parts, and this starts with finding the best suppliers in the industry. Our purchasing team sources high quality materials with over 95% of our raw materials being purchased in Canada and the United States. We have also partnered with Forges De Niaux (France), who make the most robust and longest wearing disc in the global market. Similarly, we have an agreement established with Michigan based company Richmond Brothers, who make the longest wearing Deep Tillage products in the market.

This year we started the journey towards ISO 9001 Certification and our objective is to become ISO certified by the end of 2023. This standard is becoming more important for Canadian agricultural manufacturing as it is a common language for quality management across multiple industries globally. Although we already believe we operate to this standard, we would like this certification to give comfort to our customers that our focus meets and exceeds a globally recognized standard.

Innovation

One of our core principles is to ensure that our products fulfill a need that is not being met in the market. If we cannot find a way to create value for our customer, then the project does not move forward. Over the years, BTT has had many first to market concepts including the Speed-Loc tillage products, Maxlife Innovations, replaceable tips, and Eco-Sweeps. We also value companies who are innovative, and recognize them through valuable partnerships to allow farmers to access the highest quality products in the market. Our innovation starts with our customer, where their feedback from the field reaches our territory managers, dealers, and Original Equipment Manufacturers. We then work with the customer to design products to their specification. Our R&D team has the resources required to develop prototypes in house. They are then adequately tested in the field to meet the customers objectives before hitting our production floor.

Customer Focus

This year, we have been busy expanding into new markets with products such as Maxlife Power Hiller Tines, ECO Sweeps for interrow weed control, and a new series of 1/2" products for both fertilizer and seed application. This new line of low disturbance knives that provide the most precise placement of product, while allowing the farmer to reduce fuel consumption and increase speed. We have also been active in building new partnerships with OEM customers and have developed several new products that will be used on equipment being manufactured in 2024.

How we treat our customers is just as important as the products that we develop, and we value the customer relationship so much that we back it with a warranty and performance guarantee program. We also know that sometimes it is challenging to try new concepts, so we offer a "Try before you Buy" program to help ensure that new customers are comfortable with their investment. We are very confident in our products since we have over 30 years of experience and our warranty claims are less than .05% of total product sales.

Efficiency

This year we launched an Operational Excellence program focused on reviewing all areas of our company to find opportunities for continual improvement. Each project has been rigorously selected, and team members are trained in lean principles to ensure that the implementation is successful. The ultimate objective is to focus on waste reduction and increase value and quality for the customer. Operational Excellence has also allowed us to develop our production strategies and investment in personnel, equipment, and buildings that bring a return to customers. Although we have made strategic investments in our growth, we do this through thorough evaluation considering the impact it has on our performance, people, and the communities we serve. Although we may not be the lowest priced product in the market, we aim to deliver our customers the lowest cost per acre with the highest return on investment.

Forging into the Future

Sometimes it can be difficult to navigate the future when there are so many current challenges facing our industry. World politics has seemingly taken over the headlines with social issues such as inflation, environmental concerns, and equal rights. It has had significant economic implications, but one simple truth remains. Farmers are extremely important because we cannot survive without food. This is why our company has taken the commonsense approach of focusing on the farmer as our top priority, and to do so in a way that leaves a positive impact in our communities.
We appreciate your continued support and use of our products and look forward to seeing you in the field in 2024!

Ryan Olson,
General Manager

Helping You Succeed

At Bourgault Tillage Tools (BTT), we think you should expect a lot. We strive to deliver that with exceptional customer service, on-farm visits, high-quality North American-made products, and the best Warranty and Performance Guarantee in the market.

The demands and needs of each farm are unique. Our objective with on-farm visits is to help farmers become more efficient and profitable. We take the time to learn about your operation, discover what products you're currently using, and discuss seeding, fertilizing, and tilling challenges.

After getting a clear picture of existing practices, we review our product line to discuss options and solutions for your operation. Talking directly with our customers is valuable for our team also as it influences product development and helps us uncover opportunities for new projects and innovations.

We call this The BTT Difference, and these are just a few of the ways we go the extra mile to keep your operation growing.

BTT Performance Guarantee

BTT guarantees the product you purchase will perform to its designed specification under normal conditions. Under some adverse conditions, the performance of the product may be affected.

If the product does not perform its designed task within the first season of use, please inform us of the issue immediately and grant us the opportunity to visit your farm to assess the situation.

If we cannot correct the situation, we will guarantee you a 100% refund.

Failure to follow our recommendations will render the Performance Guarantee void.

To learn more about adverse seeding conditions, see page 18.

Warranty

Warranty only covers defects in materials and workmanship and is limited to replacement of the failed part. It does not cover any consequential damages.

Warranty will not be provided on any BTT parts that have been used with non-original BTT parts.

To obtain warranty, the part must be returned to the dealer to complete the warranty claim form. An invoice must be provided.

All products (with the exception of disk blades) have a 3 Year Limited Warranty, at our discretion, from the date of purchase as follows:

- 1st year prorated to a maximum of 100%
- 2nd year prorated to a maximum of 70%
- 3rd year prorated to a maximum of 40%

Sweeps, Chisels & Spikes

These parts are warrantied (prorated based on wear) against failure due to breakage or bending unless worn excessively.

Excessive wear means:

- The wing of the sweep measures 60% or less of its original width.
- The material thickness is 60% or less of the original thickness. (Example: a new Bourgault sweep that is 0.250" thick x 0.60 = 0.150. At this point, and after that, warranty is void).

Quick Change Products

Effective January 1st, 2001, all products used on the 100 and 400 Series adapters will not be warrantied against loss. All products used on 200 and 410 Series adapters will be warrantied against loss.

Chrome & Carbide Tips

Carbide is warranted for loss only. Chipping of carbide is normal. If the brazing fails and the carbide falls off, return the part to the dealer.

Products with a chrome or carbide tip will not be warrantied against chipping related to installation issues unless the appropriate driver has been used.

Niaux 200 Disk Blades

Our disk blades have a lifetime warranty on breakage due to manufacturer defect.

MAX LIFE™ Harrow Tines

Harrow tines are warrantied from the date of purchase against breakage for three years, prorated to a maximum of 100%.

Trip Strength Considerations

Our seed openers need to perform in some challenging conditions, and we design our products with durability in mind. The end-user has the responsibility to make sure the machine is best suited to the operating conditions.

Proper trip strength will save you time and money. When determining the appropriate trip strength, some factors to consider are soil type, amount of rock, and type of seed opener used.

A heavy trip is not "one size fits all." Buying a seeding machine with heavier trips than required for proper penetration may result in:

- broken or damaged seed openers
- broken or bent shanks
- more rocks pulled to the surface

BTT reserves the right to limit warranty claims on trip strengths greater than 400 pounds.

Questions?

Please ask your Territory Manager or contact our Service & Warranty Manager directly at 1.800.878.7714.

Contact Us

Patrick Yeager
Managing Director of Sales & Marketing
C 306.921.7718

Cornelius Chomenchuk
Sales Manager
Pacific Northwest USA & Manitoba Territory Manager
C 204.724.2012

Nicole Peterson
Marketing Manager
P 800.878.7714
Ext 240

Roger Schierman
Alberta Territory Manager
C 780.781.2134

Chris Miller
Saskatchewan Territory Manager
C 306.231.3244

Rick Eberle
USA Territory Manager
C 701.381.8385

Penny Ulledal
Inside Sales
P 800.878.7714
Ext 220

Kelly Stevenson
BTT WEAR IQ
Business Development/ Corporate Account Manager
C 306.921.7888

Len Horvath
BTT WEAR IQ
Business Development
C 306.921.6995

Dean Bigelow
R&D Manager
C 306.921.3888

Dylan Theis
Service & Warranty Manager
C 306.921.4794

Rick Schemenauer
Corporate Account Manager
C 306.921.5967

Ian Clayton-Bailey
BTT UK
Managing Director
C +44 (0) 7876 563514

Stuart Aldworth
BTT UK & European Technical Manager
C +44 (0) 7825 339483

Partners In Global Distribution

North America

F.P. Bourgault Tillage Tools Ltd.
Canada & Northern United States
200-5th Ave South, St. Brieux, SK, Canada
S0K 3V0
P 1.800.878.7714
F 1.306.275.4720
tillagetools.ca

Australia

Bourgault Australia Pty Ltd.
Australian Western Distribution Centre
70 Gillam Drive, Kelmscott, WA 6111
P 08-9399-9700
bourgault.com

Bourgault Australia Pty Ltd.
Australian Eastern Distribution Centre
604 Wagga Rd, Ettamogah, NSW 2640
P 02-6025-8298
bourgault.com

Europe & UK

Industriehof GmbH
Western & Central Europe
Im Winkel 5 D-30900
Wedemark, Germany
P +49 (0) 5130 60 72 0
industriehof.com

BTT UK LTD
United Kingdom
Bukehorn Farm
Bukehorn Road, Thorney
Peterborough PE6 0QG
P 01733 971 971
bttuk.com

Eastern Europe

Bourgault Industries Ltd.
Head Office
Eastern Europe | Kiev
P/F +38 (044) 563-71-91
bourgault.com

Bourgault Industries Ltd.
Russia | Krasnodar
P +7 (861) 252-79-33

Bourgault Industries Ltd.
Kazakhstan | Kostanay
P/F +7 (7142) 223 955

LLC Kramp
Russia
142324 Moscow Region, Chekhov District, Industrial Zone Liutoretskoye 6 Bld. 1, Room 101
P +7-495-662-55-46
info.ru@kramp.com

OOO CanAgro
Russia | Omsk
P +7 (3812) 551-500
can-agro.com

Industriehof LLC
Russia
123592, Moscow, St. Marshal Katukov, 20 room 7/1
P +7 (495) 374 7846
info@industriehof.ru

TOO CanAgro
Kazakhstan | Kokschetau
P +7 (7162) 77 52 76
can-agro.com

TOO CT Agro
Kazakhstan | Kokschetau
P +7 (7162) 77 52 77
ctagro.com

High Quality. Superior Wear.

NORTH AMERICAN-MADE

High Chrome Material

Replaceable tips are cast with high chrome material, increasing the life span of the tip.

Tungsten Carbide Inserts

The highest quality tungsten carbide is placed on our tips in-house. Extra-long carbide is used in extremely abrasive conditions, ensuring the longevity of the tip while maximizing seed bed utilization.

North American-Made

All primary wearing replaceable tips are cast by Leth Iron in Lethbridge, Alberta, Canada using the best materials available.

Easy Installation

Quickly and easily install new tips with our bolt and nut combos, proven to work when roll pins won't.

LOOK FOR THE LETHIRON MARK ON BTT PRODUCTS!

SINGLE SHOOT (PG 12) | PAIRED ROW (PG 14) | SIDE BAND (PG 16) | FERTILIZER (PG 17)

Replaceable Tips

Single Shoot Replaceable Tips

These tips use bolt and nut combo 200-BNC-3100 for installation.

200-TIP-0511

CARBIDE TIP

1/2" (13mm) tip with carbide insert on the nose.
Not recommended in highly abrasive conditions.

200-TIP-0800

CHROME TIP

3/4" (19mm) tip.
Not recommended in highly abrasive conditions.

200-TIP-0801

CARBIDE TIP

3/4" (19mm) tip with carbide insert on the nose.

200-TIP-0802

CARBIDE TIP

3/4" (19mm) tip with extra long carbide on the nose for highly abrasive conditions.

200-TIP-0803

CARBIDE TIP

3/4" (19mm) tip with extra long carbide on the nose and sides for highly abrasive conditions. Identical to 200-TIP-0802 with the addition of side carbide inserts.

200-TIP-0811

VERTICAL CARBIDE TIP

3/4" (19mm) vertical tip with extra long carbide on the nose for highly abrasive conditions.

200-TIP-1011

VERTICAL CARBIDE TIP

1" (25mm) vertical tip with double carbide insert. Recommended for rocky and highly abrasive conditions.

200-TIP-2011

CARBIDE SPREAD TIP

2" (51mm) tip with carbide insert on the nose to fracture the ground. Carbide inserts on the underside of the wings to maintain a sharp cutting edge.

200-TIP-3000

CHROME SPREAD TIP

3" (76mm) tip.
Not recommended in highly abrasive conditions.

200-TIP-3001

CARBIDE SPREAD TIP

3" (76mm) tip with carbide insert on the nose and hard facing on the underside of the wings.

200-TIP-3011

CARBIDE SPREAD TIP

3" (76mm) tip with carbide insert on the nose to fracture the ground. Carbide inserts on the underside of the wings to maintain a sharp cutting edge.

200-TIP-4011

CARBIDE SPREAD TIP

4" (102mm) tip with carbide insert on the nose to fracture the ground. Carbide inserts on the underside of the wings to maintain a sharp cutting edge.

610-TIP-0802

CARBIDE SPREAD TIP

3/4" (19mm) long-wearing single shoot tip with extra long carbide on the nose for highly abrasive conditions. Used for seeding or fertilizing (not for double shooting).

Fits VOS (Versatile Opener System).
See page 58-59.

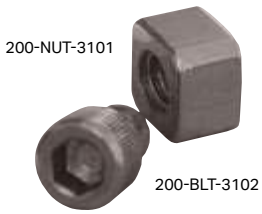

200-BNC-3100

BOLT & NUT COMBO

Bolt and nut combo used to secure single shoot, paired row and side band tips onto holders.

The bolt and nut should be replaced when changing the tip to maintain locking ability of the nut. See page 117 for installation and removal instructions.

200-TIP-0802 is 20% more in price, compared to 200% more in wear.

Anyone that has tried the 0802 in their wheel tracks can confirm what I'm saying. If you're in high or somewhat high wear conditions, 0802 is hands-down the best choice. Amazing point, great job BTT, well done. Any producer would be happy to the 10th degree. Keep up the good work.

Scott Biss, Saskatchewan, Canada

Paired Row Replaceable Tips

These tips use bolt and nut combo 200-BNC-3100 for installation (see page 13).

610-TIP-4041

CARBIDE TIP

4" (102mm) Paired Row cast chrome tip with carbide insert on the nose for excellent penetration and wear resistance.

Carbide inserts on the underside of the wing to maintain a sharp cutting edge.

This Paired Row liquid or granular double shoot tip has no vertical seed/fertilizer separation. Can be used for single shoot or Paired Row to utilize more seedbed.

610-TIP-4030

CARBIDE TIP

4" (102mm) Paired Row cast tip with carbide insert on the nose for excellent penetration and wear resistance. These tips have 3/4" (19mm) vertical drainage trench.

Carbide inserts on the underside of the wing to maintain a sharp cutting edge. This Paired Row liquid or granular double shoot tip has no vertical seed/fertilizer separation.

Fits VOS (Versatile Opener System). See page 58-59.

610-TIP-4035

CARBIDE TIP

4" (102mm) Paired Row cast tip with carbide insert on the nose for excellent penetration and wear resistance. These tips have a 3/4" (19mm) vertical drainage trench.

Carbide inserts on the underside of the wing to maintain a sharp cutting edge. This Paired Row liquid or granular double shoot tip has no vertical seed/fertilizer separation.

Fits VOS (Versatile Opener System). See page 58-59.

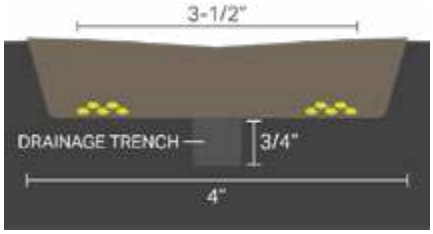

SHOWN WITH SINGLE SHOOT HOLDER 688-HLD-1000

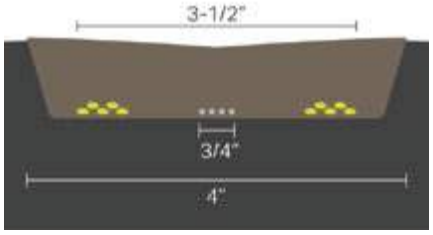

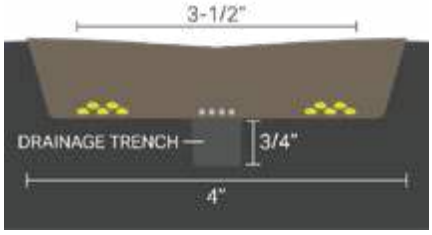

SHOWN WITH DOUBLE SHOOT HOLDER 688-HLD-2000

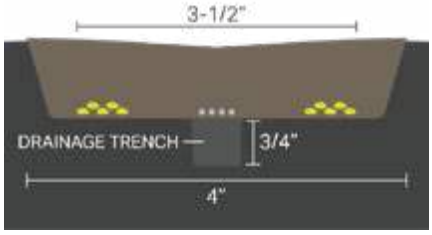

SHOWN WITH HOLDER 688-HLD-2080

SEED
FERTILIZER

Drawings for illustration purposes only. All measurements shown are approximate. Results may vary with multiple factors including soil conditions, ground speed, fan speeds, application rates, and more. In less than ideal conditions, mixing between seed and fertilizer may occur. See precautions and risk factors on page 18.

610-TIP-3581

CARBIDE TIP

3-1/2" (89mm) Paired Row cast chrome tip with 3/4" (19mm) vertical separation of liquid, granular, or aqua NH3 fertilizer.

Carbide insert on the nose for excellent penetration and wear resistance. Carbide inserts on the underside of the wing maintain a sharp cutting edge.

Carbide inserts at the back underside of the wings seal the fertilizer trench prior to seed placement.

Fits VOS (Versatile Opener System).
See page 58-59.

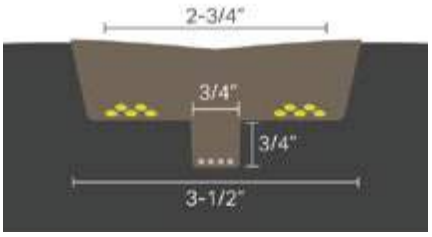

610-TIP-4081 / 4082 / 4085

CARBIDE TIP

4" (102mm) Paired Row cast chrome tip with carbide insert on the nose for excellent penetration and wear resistance. These tips have 3/4"(19mm) vertical separation of granular, liquid, aqua NH3 or aqua NH3 + phosphorous fertilizer.

Carbide inserts on the underside of the wing maintain a sharp cutting edge. Carbide inserts on the back underside of the wings seal the fertilizer trench prior to seed placement.

610-TIP-4082 has additional carbide below the wings, along the sides of the fertilizer trench, to provide extra-wear life.

Not recommended for use on Case IH 800/900 or NH P2070.

610-TIP-4085 for Europe only.

Fits VOS (Versatile Opener System).
See page 58-59.

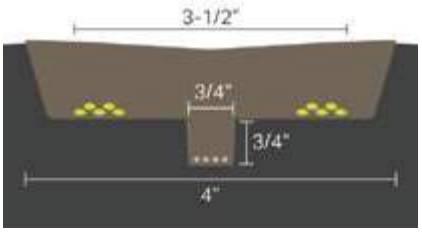

610-TIP-6082

CARBIDE TIP

6" (152mm) Paired Row cast tip with carbide insert on the nose for excellent penetration and wear resistance. These tips have 3/4" (19vmm) vertical separation of liquid, granular, aqua NH3 or aqua NH3 + phosphorous fertilizer.

Carbide inserts on the underside of the wing maintain a sharp cutting edge. Carbide inserts on the back underside of the wings seal the fertilizer trench prior to seed placement. Additional carbide is placed along the sides of the fertilizer trench, below the wings, to provide extra-wear life.

Fits VOS (Versatile Opener System).
See page 58-59.

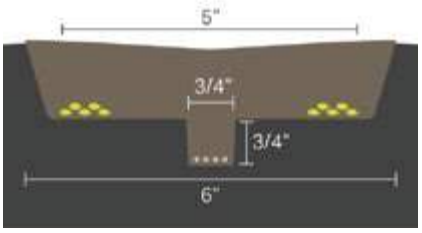

Side Band Replaceable Tips

These tips use bolt and nut combo 200-BNC-3100 for installation (see page 13).

612-TIP-0211
612-TIP-0212

CHROME TIP

Side Band cast chrome TriMax™ Triple-Shoot System tip with carbide inserts on the nose and the underside of the wing for excellent penetration and wear resistance.

The seed is placed in a 3/4" (19mm) band onto a firm seedbed. The starter fertilizer is placed to the side onto a slightly lower shelf than the seed.

612-TIP-0211 LEFT WING
612-TIP-0212 RIGHT WING

612-TIP-0711
612-TIP-0712

CHROME TIP

Side Band cast chrome tip with carbide inserts on the nose and the wing for excellent penetration and wear resistance.

The seed is placed in a 3/4" (19mm) band onto a firm, unfractured seedbed. Fertilizer is delivered in a band off to the side (right or left) on the same level as the seedbed.

612-TIP-0711 LEFT WING
612-TIP-0712 RIGHT WING

614-TIP-2711
614-TIP-2712

CARBIDE TIP

Side Band cast chrome tip with carbide inserts on the nose and the wing for excellent penetration and wear resistance. A carbide wafer on the bottom of the fertilizer trough prevents bottom wear and keeps the fertilizer trench open.

The seed is placed in a 1-1/2" (38mm) band 3/4" (19mm) above and to the side of the fertilizer row after the fertilizer trench has been closed by the wing.

614-TIP-2711 LEFT WING
614-TIP-2712 RIGHT WING

PLEASE NOTE

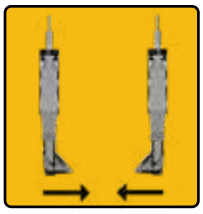

ALL WINGS ON SIDE BAND OPENERS MUST BE POINTING INWARD TO CENTER OF SEEDING UNIT
to prevent plugging when turning. Customers should order half left wing and half right wing openers.

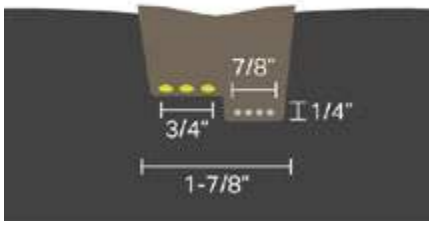

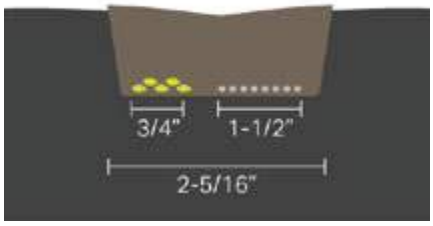

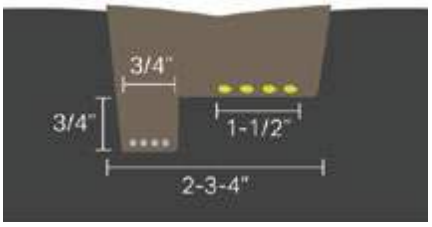

SEED
FERTILIZER

Drawings for illustration purposes only. All measurements shown are approximate. Results may vary with multiple factors including soil conditions, ground speed, fan speeds, application rates, and more. In less than ideal conditions, mixing between seed and fertilizer may occur. See precautions and risk factors on page 18.

Fertilizer Replaceable Tips

These tips use bolt and nut combo 600-BNC-5000 for installation.

600-TIP-7500

CARBIDE TIP

3/4" (19mm) chrome tip with carbide on the nose.

Fits 410, 599, 600, 602, 670 & 674 Series fertilizer knife holders.

600-TIP-7501

CARBIDE TIP

3/4" (19mm) chrome tip with extra long carbide on the nose.

Fits 410, 599, 600, 602, 670 & 674 Series fertilizer knife holders.

600-TIP-7502

CARBIDE TIP

3/4" (19mm) chrome tip with extra long carbide on the nose.

Fits 410, 599, 600, 602, 670 & 674 Series fertilizer knife holders.

600-TIP-7507

CARBIDE TIP & WING

3/4" (19mm) carbide tip and wing for liquid application. This allows vertical and horizontal separation when double-shooting with liquid.

Only used with side band opener 600-KNH-7562.

600-BNC-5000

BOLT & NUT COMBO

Used to secure 600 series tips onto the 410, 599, 600, 602, 670 & 674 Series fertilizer knife holders.

The nut (600-NUT-3754) and bolt (600-BLT-5004) can be ordered separately.

The bolt and nut should be replaced when changing the tip to maintain locking ability of the nut.

There is only one BTT replaceable tip.

Know what you're getting on your next replaceable tip purchase.

Look for a combination of these key identifying features found only on authentic BTT tips.

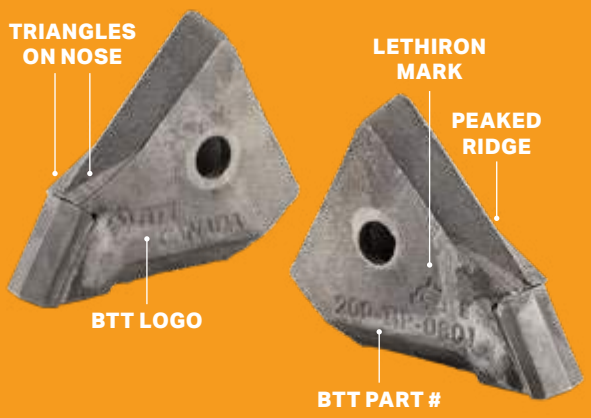

For guaranteed delivery of multi-shoot openers, place order by January 31st.

Multi-Shoot Opener Precautions & Risk Factors

The development and increased use of multi-shoot openers for one-pass seed and fertilizer placement often brings up the question of how much fertilizer can be safely placed with the seed without causing germination problems or seedling damage. The answer to this question is very complex. In less than ideal conditions, mixing between seed and fertilizer may occur.

It is our company's policy not to recommend or endorse specific "safe" rates of fertilizer for multi-shoot openers due to the wide variance in the precautions and risk factors listed below. Most of our openers are tested at independent research facilities to verify only the placement of seed and fertilizer. We suggest that producers consult their local agronomist to establish acceptable fertilizer rates for their unique seeding conditions.

Consider These Factors When Using Multi-Shoot Openers:

FERTILIZER SOURCE: Depending on the type of fertilizer used, damage can occur either through NH3 toxicity, salt effects, or a combination of both, as in the case with blended fertilizer.

FERTILIZER RATES: Typically, the risk of crop seedling injury increases with higher fertilizer rates.

CROP TYPE: Crops vary in their ability to tolerate seed-placed fertilizer with cereals being able to withstand more than oilseeds, and pulses falling somewhere in between.

SEED QUALITY: With everything else being equal, seed with poor vigor will suffer more damage from seed-placed fertilizer than seeds with high vigor. If seed vigor is questionable, have it tested.

SOIL MOISTURE: With soil at or near saturation point, the toxic effects of fertilizer are diluted and seeds can germinate, and develop, with few problems. If conditions are very dry, reduce the amount of fertilizer placed near the seed.

SOIL TEXTURE: Fine textured soils such as clay or clay loam tend to reduce toxic effects over coarse or sandy soils because of their ability to hold more water and absorb toxic free NH3.

ORGANIC MATTER: Higher levels of organic matter (OM) in a soil lessen the risk of damage. For example, when there are reduced levels of OM on dry, eroded hilltops, seedlings are more prone to injury.

SEEDBED UTILIZATION (SBU): This is the proportion of the seedbed used for seed and fertilizer placement. As SBU increases, the crops tolerance to higher rates of seed-placed fertilizer increases. Ex: 2" openers on 10" row spacing have a SBU of 20%.

SEEDING DEPTH, PACKING & SPEED: These may compromise seed and fertilizer placement as well as the overall quality of the seeding operation.

ADVERSE SEEDING CONDITIONS: Excessively wet or dry soil at time of seeding can cause erratic seed placement, poor seed-to-soil contact and poor separation, which will also affect the amounts of seed placed fertilizer you can apply.

EXCESS AIR VOLUME: Higher air volumes can result in seed and fertilizer being blown out of the trench or mixing of seed and fertilizer in the trench.

If any of the above conditions are less than ideal, it is advisable to reduce your fertilizer rate accordingly.

FERTILIZER TYPES

Openers

Openers to Fit C-shank

Single & Multi-Shoot Options

047-ASY-1000
047-KNH-1000

SINGLE SHOOT OPENER

FITS: 47° and 50° C-shank

FERTILIZER TYPE: Starter Fertilizer w/ Seed Only

TUBE SIZE: 1-1/4" (32mm) O.D.

BOLT HOLE SPACING: 1-3/4" to 2-1/2" (44-64mm) slotted hole spacing provides the ability to fit many other makes and models.

TIP OPTIONS: Any 200 Series Single Shoot Replaceable Tip, allowing you to choose the right tip for your conditions. **Tips sold separately.** See pages 12-13.

OVERVIEW: Seed is delivered through the precision funnel opening. The front delivery provides precise seed delivery and reduces plugging with better soil flow. Extra hard surfacing on critical wear areas increases the life of the holder.

NOTES: **Installation bolts sold separately.** **047-ASY-1000** uses Grade 8 carriage bolts and **047-KNH-1000** uses plow bolts. See page 116. For an expanded view of this opener see page 123.

047-KNH-1000 is only used directly beside the Bourgault MRB® for improved trash clearance. **Not sold as a complete set, must be ordered separately.** Customers must look at the machine to determine what quantity of shanks are directly beside the MRB®.

50° shanks require 880-WDG-0300 or 880-WDG-0301. See page 114.

047-ASY-1005P

SINGLE SHOOT OPENER

FITS: 47° and 50° C-shank

FERTILIZER TYPE: Starter Fertilizer w/ Seed or Liquid Phos w/ Seed

TUBE SIZE:
Granular: 1-1/4" (32mm) O.D.
Liquid Phos: 3/16" (5mm) O.D.
Can be converted to work with 1/4" (6mm) I.D. delivery hose with 880-ASY-1010. See page 114.

BOLT HOLE SPACING: 1-3/4" to 2-1/2" (44-64mm) slotted hole spacing provides the ability to fit many other makes and models.

TIP OPTIONS: Any 200 Series Single Shoot Replaceable Tip, allowing you to choose the right tip for your conditions. **Tips sold separately.** See pages 12-13.

OVERVIEW: Liquid phos is delivered onto the seed bed, below the seed. Seed is delivered through the precision funnel opening. Front delivery provides precise placement and reduces plugging with better soil flow. Extra hard surfacing on critical wear areas increases holder life.

NOTES: **Installation bolts sold separately.** Use Grade 8 carriage bolts. See page 116.

50° shanks require either 880-WDG-0300 or 880-WDG-0301. See page 114.

For an expanded view of this opener see page 123.

047-VRT-1040

SINGLE SHOOT OPENER

FITS: 47° C-shank

FERTILIZER TYPE: Starter Fertilizer w/ Seed Only

TUBE SIZE: 1-1/4" (32mm) O.D.

BOLT HOLE SPACING: 1-3/4" (44mm)

TIP OPTIONS: 1" (25mm) weld-on tip with extra carbide for long-lasting wear life.

OVERVIEW: The vertical approach of this opener reduces rock pulling and soil throw.

NOTES: **Installation bolts sold separately.** Use plow bolts. See page 116.

050-KNH-0812

SINGLE SHOOT OPENER

FITS: 47° and 50° C-shank

FERTILIZER TYPE: Starter Fertilizer w/ Seed Only

TUBE SIZE: 1-1/4" (32mm) O.D.

BOLT HOLE SPACING: 1-3/4" to 2-1/2" (44-64mm) slotted bolt hole spacing provides the ability to fit many different makes and models.

TIP OPTIONS:
- 200-TIP-1011
- 200-TIP-2011
- 200-TIP-3000
- 200-TIP-3001
- 200-TIP-3011
- 200-TIP-4011

Tips sold separately.
See pages 12-13.

OVERVIEW: The rear delivery of this opener provides extra trash clearance.

NOTES: Installation bolts sold separately. Use Grade 8 hex head bolts. See page 120.

Due to plugging, this opener is not recommended with tips:
- **200-TIP-0511**
- **200-TIP-0800**
- **200-TIP-0801**
- **200-TIP-0802**
- **200-TIP-0803**
- **200-TIP-0811**

599-KNH-7540

SINGLE SHOOT OPENER

FITS: 47° C-shank

FERTILIZER TYPE: Starter Fertilizer w/ Seed Only

TUBE SIZE: 1-1/4" (32mm) O.D.

BOLT HOLE SPACING: 1-3/4" (44mm)

TIP OPTIONS:
3/4" (19mm) tips:
- 600-TIP-7500
- 600-TIP-7501
- 600-TIP-7502

Tips sold separately. See page 17.

OVERVIEW: This opener is designed for a better fit on the Bourgault shank. The larger tip provides extra long wear while reducing wear on the holder.

NOTES: Installation bolts sold separately. Use Grade 8 hex head bolts. See page 118 and 121.

602-KNH-7540

SINGLE SHOOT OPENER

FITS: 47° and 50° C-shank

FERTILIZER TYPE: Starter Fertilizer w/ Seed Only

TUBE SIZE:
600-KNH-7540: 1-1/4" (32mm) O.D.
600-KNH-7640: 1-1/2" (38mm) O.D.

BOLT HOLE SPACING: 1-3/4" to 2-1/2" (44-64mm) slotted bolt hole spacing provides the ability to fit many different makes and models.

TIP OPTIONS:
3/4" (19mm) tips:
- 600-TIP-7500
- 600-TIP-7501
- 600-TIP-7502

Tips sold separately. See page 17.

OVERVIEW: The larger tip on these holders provides extra long wear while reducing wear on the holder.

NOTES: Installation bolts sold separately. Use Grade 8 hex head bolts. See page 118 and 121.

For guaranteed delivery of multi-shoot openers, place orders by January 31st.

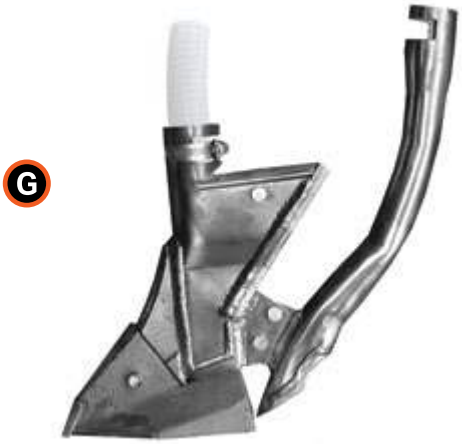

610-ASY-4020*

PAIRED ROW OPENER

SEED PLACEMENT: Seed is directed rearward through the tip which places the seed in two rows onto a firm, unfractured seedbed.

FERTILIZER PLACEMENT: Fertilizer is delivered on the same level, between the rows of seed. In less than ideal conditions, mixing between seed and fertilizer may occur. **See precautions and risk factors on page 18.**

BOLT HOLE SPACING: 1-3/4" to 2-1/2" (44-64mm) slotted hole spacing provides the ability to fit many other makes and models.

TIP OPTIONS: Replaceable cast chrome tip (610-TIP-4041) with carbide inserts on the nose and narrow carbide on the cutting edges of the wings for great penetration. **Assemblies on this page include the tip.**

PACKER RECOMMENDATION: 4" (102mm) or wider.

OVERVIEW: Ultra-low draft, low disturbance and smoother fields. Hard facing is placed on critical wear points to ensure a long-lasting holder. The streamlined holder design reduces plugging and allows for better trash clearance. Designed for use with 1-1/4" (32mm) O.D. hose. Bushings available for smaller hoses.

These openers provide the flexibility to easily switch between Granular and Liquid fertilizer. The above openers are available with Liquid Phos options. Please call the factory for more information.

NOTES: **Installation bolts sold separately.** Use Grade 8 carriage bolts. See page 116.

When installing on 50° shanks other than Bourgault or Ezee-On use wedge 880-WDG-0300 or 880-WDG-0301. See page 114.

For an expanded view of these openers see page 127.

610-ASY-4026*

PAIRED ROW OPENER

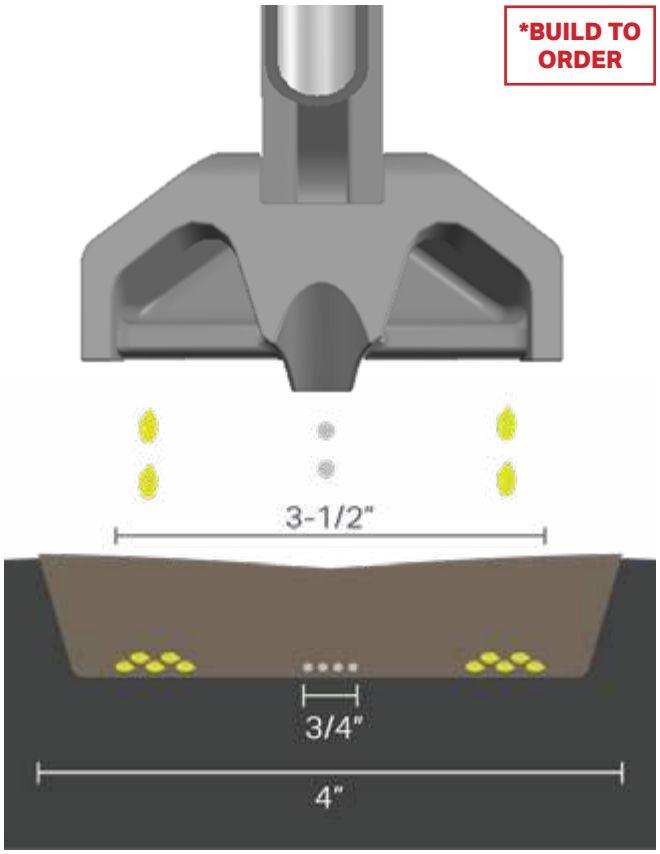

SEED FERTILIZER REAR VIEW

Drawings for illustration purposes only. All measurements shown are approximate. Results may vary with multiple factors including soil conditions, ground speed, application rates, fan speeds, and more. In less than ideal conditions, mixing between seed and fertilizer may occur. See precautions and risk factors on page 18.

For guaranteed delivery of multi-shoot openers, place orders by January 31st.

610-ASY-2712G

610-ASY-2712L

610-ASY-2711G
610-ASY-2712G

SIDE BAND OPENER

SEED PLACEMENT: The seed is placed 3/4" (19mm) above and to the side of the fertilizer row, the tip's wing seals the fertilizer trench.

FERTILIZER PLACEMENT: Fertilizer is placed in the center 3/4" (19mm) below the seed bed. In less than ideal conditions, mixing between seed and fertilizer may occur. **See precautions and risk factors on page 18.**

BOLT HOLE SPACING: 1-3/4" to 2-1/2" (44-64mm) slotted hole spacing provides the ability to fit many other makes and models.

TIP OPTIONS: Replaceable cast chrome tip with extra long carbide inserts on the nose of the tip for excellent penetration and wear resistance. Top face of wing is covered with two carbide inserts providing excellent wear resistance. **Assemblies on this page include the tip.**

PACKER RECOMMENDATION: 3" (76mm) or wider. **V-Packer not recommended with these openers.**

OVERVIEW: Hard facing is placed on critical wear points to ensure a long-lasting holder and proper seed placement. The streamlined holder design reduces plugging and allows for better trash clearance.

Designed for use with 1-1/4" (32mm) O.D. hose. Bushings available for smaller hoses.

NOTES: **Installation bolts sold separately.** Use Grade 8 carriage bolts. See page 116.

When installing on 50° shanks other than Bourgault or Ezee-On use wedge 880-WDG-0300 or 880-WDG-0301. See page 114

For an expanded view of these openers see page 129.

610-ASY-2711L
610-ASY-2712L

SIDE BAND OPENER

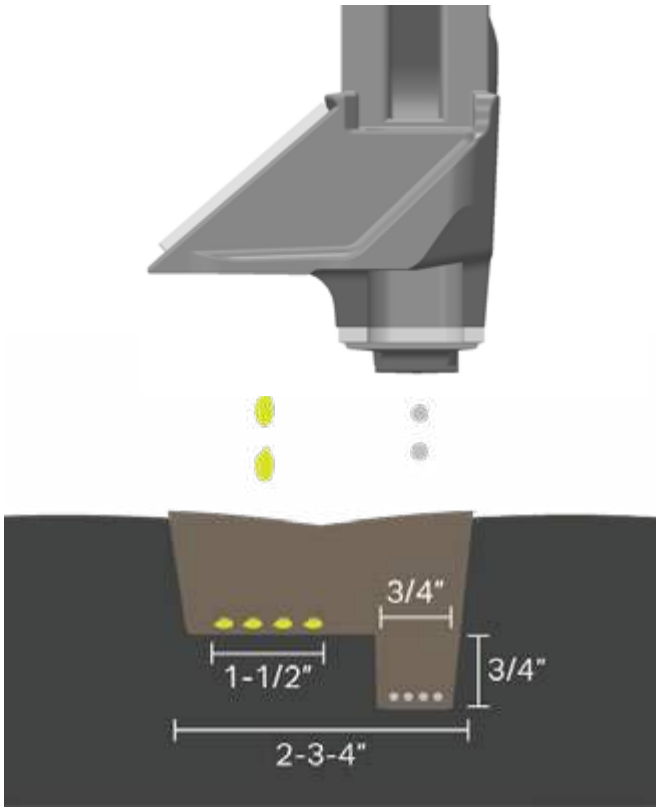

SEED FERTILIZER REAR VIEW

Drawings for illustration purposes only. All measurements shown are approximate. Results may vary with multiple factors including soil conditions, ground speed, application rates, fan speeds, and more. In less than ideal conditions, mixing between seed and fertilizer may occur. See precautions and risk factors on page 18.

ALL WINGS ON SIDE BAND OPENERS MUST BE POINTING INWARD TO CENTER OF SEEDING UNIT to prevent plugging when turning. Customers should order half left wing and half right wing openers.

612-ASY-0711

610-ASY-0711GP

612-ASY-0712LP

G	G P	*BUILD TO ORDER L	L P
NOT AVAILABLE	610-ASY-0711GP* 610-ASY-0712GP*	NOT AVAILABLE	610-ASY-0711LP* 610-ASY-0712LP*
612-ASY-0711 612-ASY-0712	612-ASY-0711P 612-ASY-0712P	612-ASY-0711L 612-ASY-0712L	612-ASY-0711LP 612-ASY-0712LP

SIDE BAND OPENERS

SEED PLACEMENT: The seed is placed in a 3/4" (19mm) band onto a firm, unfractured seedbed. The 610 GP & LP openers deliver the liquid phoshorus below the seed. The 612 GP & LP openers deliver the liquid phoshorus on top of the seed.

FERTILIZER PLACEMENT: Fertilizer is delivered in a band off to the side (right or left) on the same level as the seed. In less than ideal conditions, mixing between seed and fertilizer may occur. **See precautions and risk factors on page 18.**

TIP OPTIONS: Replaceable cast chrome tip (612-TIP-0711 & 612-TIP-0712) with carbide inserts on the nose of the tip and the wing for excellent penetration and wear resistance. Narrow carbide cutting edge on the wing for exceptional penetration. **Assemblies on this page include the tip.**

PACKER RECOMMENDATIONS:
2-1/4" (57mm) or wider.

OVERVIEW: Unique design of the tip provides low disturbance, low draft and smoother fields. Hard facing is placed on critical wear points to ensure a long-lasting holder and proper seed placement. The streamlined holder design reduces plugging and allows for better trash clearance. Designed for use with 1-1/4" (32mm) O.D. hose. Bushings available for smaller hoses.

NOTES: **Installation bolts sold separately.** Use Grade 8 carriage bolts. See page 116. **When installing on 50° shanks other than Bourgault or Ezee-On use wedge 880-WDG-0300 or 880-WDG-0301.** See page 114.

For an expanded view of these openers see page 128.

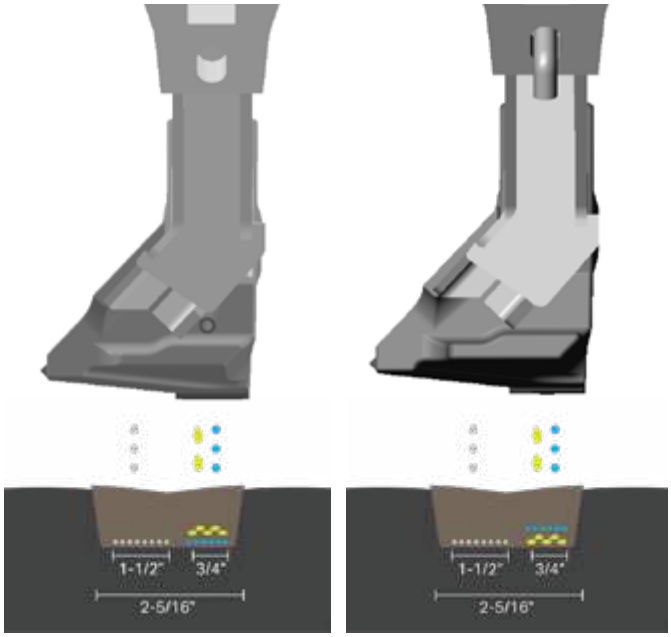

610-ASY-0711GP (SHOWN)
610-ASY-0711LP

612-ASY-0711GP (SHOWN)
612-ASY-0711LP

612-ASY-0711G
612-ASY-0711L

SEED FERTILIZER LIQUID PHOS REAR VIEW

Drawings for illustration purposes only. All measurements shown are approximate. Results may vary with multiple factors including soil conditions, ground speed, application rates, fan speeds, and more. In less than ideal conditions, mixing between seed and fertilizer may occur. See precautions and risk factors on page 18.

ALL WINGS ON SIDE BAND OPENERS MUST BE POINTING INWARD TO CENTER OF SEEDING UNIT to prevent plugging when turning. Customers should order half left wing and half right wing openers.

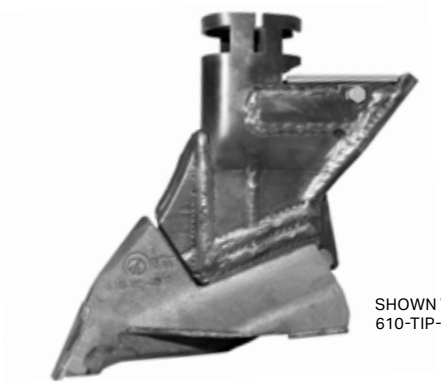

SHOWN WITH
610-TIP-4081

SHOWN WITH
620-TIP-0510 & 620-SSH-1000

610-HLD-2080HD

VOS (VERSATILE OPENER SYSTEM)

FITS: 47° and 50° C-shank

FERTILIZER TYPE: Multiple options.
See pages 58-59.

OVERVIEW: This holder is part of the VOS (Versatile Opener System) which gives you the flexibility to choose the right tip and fertilizer tubes for your needs.

Designed for use in rocky conditions, this opener has two plates welded to the sides of the funnel to help strengthen it, making it stiffer and less prone to bending in extreme conditions.

Components and tip sold separately.
See pages 58-59.

NOTES: **Installation bolts sold separately.**

Use Grade 8 carriage bolts. See page 116.

When installing on 50° shanks other than Bourgault or Ezee-On use wedge 880-WDG-0300 or 880-WDG-0301. See page 114.

620-HLD-5000

TITAN OPENER SYSTEM

FITS: 47° and 50° C-shank

FERTILIZER TYPE: Multiple options.
See pages 56-57.

OVERVIEW: This holder is part of the Titan Opener System, an innovative system giving you the most horizontal and vertical seed separation. This system gives you the flexibility to choose the right tip, seed shoe and fertilizer tubes for your needs.

Components sold separately.
See pages 56-57.

NOTES: **Installation bolts sold separately.**

Use 1/2" x 2-1/4" Grade 8 hex head bolts. See page 118.

Interested in BTT Products?

Try before you buy with the BTT Demo Program.
See page 55.

For guaranteed delivery of multi-shoot openers, place orders by January 31st.

Openers to Fit Bourgault PLDS

333-KNF-1000
333-KNF-1010

FERTILIZER KNIFE

FITS: Bourgault PLDS

FERTILIZER TYPE: N/A

TUBE SIZE: N/A

BOLT HOLE SPACING: N/A

TIP OPTIONS: N/A

OVERVIEW: This is the replacement fertilizer knife portion as supplied by the OEM for this drill. Carbide applied to the nose for longer wear.

333-KNF-1000 replaces OEM #9366-49.

333-KNF-1010 has extra hard surfacing on the sides for long wear and replaces OEM #9366-99.

NOTES: **Installation bolts sold separately.** Use 5/8" x 2-1/2" Grade 8 hex head bolts and locking nuts. See page 118.

333-KNF-2000

SINGLE SHOOT SEED OPENER

FITS: Bourgault PLDS

FERTILIZER TYPE: N/A

TUBE SIZE: N/A

BOLT HOLE SPACING: N/A

TIP OPTIONS: N/A

OVERVIEW: This is the replacement seeding knife portion as supplied by the OEM for this drill. Replaces OEM #9366-25.

Long wear back swept carbide approach angle for minimal soil disturbance around the opener.

NOTES: **Installation bolts sold separately.** Use 1/2" x 1-3/4" Grade 8 hex head bolts and locking nuts. See page 118.

333-KNF-2020

SINGLE SHOOT SEED OPENER
GUMBO KNIFE

FITS: Bourgault PLDS

FERTILIZER TYPE: N/A

TUBE SIZE: N/A

BOLT HOLE SPACING: N/A

TIP OPTIONS: N/A

OVERVIEW: This is the replacement seeding knife portion as supplied by the OEM for this drill. Replaces OEM #9366-25-50.

This knife has a front forward nose carbide minimizing debris hang up on the front of the knife.

NOTES: **Installation bolts sold separately.** Use 1/2" x 1-3/4" Grade 8 hex head bolts and locking nuts. See page 118.

CROP SEEDED USING 333-ASY-3011
INLINE PAIRED ROW OPENER

Openers to Fit Bourgault PLDS

333-KNF-0511
333-KNF-0512

INLINE BENT OFFSET SINGLE SHOOT SEED OPENER

FITS: Bourgault PLDS

FERTILIZER TYPE: Starter Fertilizer w/ Seed Only

TUBE SIZE: N/A

BOLT HOLE SPACING: N/A

TIP OPTIONS: N/A

OVERVIEW: This inline fully welded replacement single shoot seeding opener has carbide and hard surfacing for extra long wear life.

333-KNF-0511 LEFT
333-KNF-0512 RIGHT

NOTES: **Installation bolts sold separately.** Use 1/2" x 1-3/4" Grade 8 hex head bolts and locking nuts. See page 118.

333-ASY-0711
333-ASY-0712

INLINE OFFSET SINGLE SEED OPENER

FITS: Bourgault PLDS

FERTILIZER TYPE: Starter Fertilizer w/ Seed Only

TUBE SIZE: N/A

BOLT HOLE SPACING: N/A

TIP OPTIONS:
- 612-TIP-0711 (LEFT)
- 612-TIP-0712 (RIGHT)

OVERVIEW: This inline single shoot seeding opener has a replaceable tip with extra long wear life. Seed is placed to the side of the opener.

333-ASY-0711 LEFT
333-ASY-0712 RIGHT

NOTES: **Installation bolts sold separately.** Use 1/2" x 1-3/4" Grade 8 hex head bolts and locking nuts. See page 118.

333-ASY-3011

INLINE PAIRED ROW OPENER

FITS: Bourgault PLDS

FERTILIZER TYPE: Starter Fertilizer w/ Seed Only

TUBE SIZE: 1-1/4" (32mm) O.D.

BOLT HOLE SPACING: N/A

TIP OPTIONS:
- 200-TIP-3001
- 200-TIP-3011

OVERVIEW: This inline Paired Row opener delivers the seed rearward through the cast seed boot into two bands 2-1/3" apart (center to center). The replaceable 200-TIP-3011 tip will provide exceptional wear life accompanied by a durable long wear holder.

NOTES: **Installation bolts sold separately.** Use 1/2" x 1-3/4" Grade 8 hex head bolts and locking nuts. See page 118.

V Packer not recommended with this opener.

PLEASE NOTE

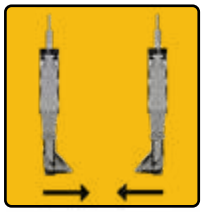

ALL WINGS ON SIDE BAND OPENERS MUST BE POINTING INWARD TO CENTER OF SEEDING UNIT
to prevent plugging when turning. Customers should order half left wing and half right wing openers.

Openers to Fit Bourgault PLS & PLX

Bourgault 3330SE Series & 3335QDA Series

680-ASY-1000

680-ASY-1000P

680-ASY-1000
680-HLD-1000

SINGLE SHOOT OPENER

FITS: Bourgault PLX, PLS, XTC, QDA

FERTILIZER TYPE: Starter Fertilizer w/ Seed Only

TUBE SIZE: 1-1/4" (32mm) O.D.

TIP OPTIONS: Any 200 Series Single Shoot Replaceable Tip, allowing you to choose the right tip for your conditions. **Tips sold separately.** See pages 12-13.

OVERVIEW: Seed is delivered through the precision funnel opening. Front delivery provides precise seed placement and reduces plugging with better soil flow. Extra hard surfacing on critical wear areas increases the life of the holder and reduces breakage in rocky conditions.

NOTES: **Installation bolts sold separately.** Use 3/8" x 2-1/4" Grade 8 carriage bolts. (960-CRG-3755 & 907-NPF) See page 116. When installing use bolt holes pictured in Fig. 1.

680-HLD-1000 does not have a bushing.

For an expanded view of this opener see page 125.

680-ASY-1000P
680-HLD-1000P

SINGLE SHOOT OPENER

FITS: Bourgault PLX, PLS, XTC, QDA

FERTILIZER TYPE: Starter Fertilizer w/ Seed or Seed w/ Liquid Phos

TUBE SIZE:
Granular: 1-1/4" (32mm) O.D.
Liquid Phos: 3/16" (5mm) O.D. Can be converted to work with 1/4" (6mm) I.D. delivery hoses with 880-ASY-1010. See page 125.

TIP OPTIONS: Any 200 Series Single Shoot Replaceable Tip, allowing you to choose the right tip for your conditions. **Tips sold separately.** See pages 12-13.

OVERVIEW: Liquid phos is delivered onto the seed bed, below the seed. Seed is delivered through the precision funnel opening. Front delivery provides precise seed placement and reduces plugging with better soil flow. Extra hard surfacing on critical wear areas increases the life of the holder and reduces breakage in rocky conditions.

NOTES: **Installation bolts sold separately.** Use 3/8" x 2-1/4" Grade 8 carriage bolts. (960-CRG-3755 & 907-NPF) See page 116. When installing use bolt holes pictured in Fig. 1.

680-HLD-1000P does not have a bushing. For an expanded view of this opener see page 125.

680-KNF-5000

SINGLE SHOOT OPENER

FITS: Bourgault PLX, PLS, XTC, QDA

FERTILIZER TYPE: Starter Fertilizer w/ Seed Only

TUBE SIZE: 1-1/4" (32mm) O.D.

OVERVIEW: This opener is designed around a smooth one piece casting. The design produces an opener having minimal drag with less soil throw. The opener is equiped with two nose carbides & added hardsurfacing to ensure a very long wear life.

NOTES: **Installation bolts sold separately.** Use 3/8" x 2" Grade 8 hex bolt (944-HRG-2000) & 3/8" flanged lock nut (907-NPF-3755) See page 116. When installing use bolt holes pictured in Fig. 1. 880-BSH-1130 is required if you use a 1-1/8" hose.

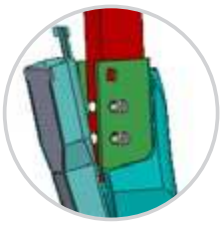

FIG. 1

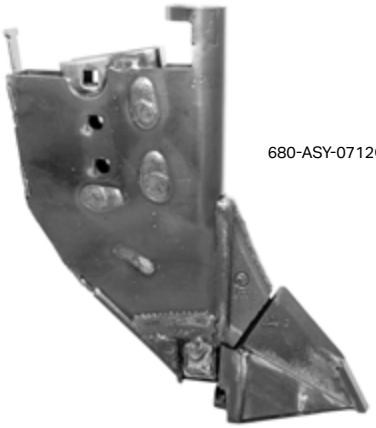

680-ASY-0712G

680-ASY-0711GP

G	L	G P	L P
680-ASY-0711G **680-ASY-0712G**	**680-ASY-0711L** **680-ASY-0712L**	**680-ASY-0711GP** **680-ASY-0712GP**	**680-ASY-0711LP** **680-ASY-0712LP**

SIDE BAND OPENERS

FITS: Bourgault PLX, PLS, XTC, QDA

SEED PLACEMENT: Seed is placed in a 3/4" (19mm) band onto a firm, unfractured seedbed. The GP & LP openers deliver the liquid phoshorus below the seed.

FERTILIZER PLACEMENT: Fertilizer is delivered in a band off to the side (right or left) on the same level as the seed. In less than ideal conditions, mixing between seed and fertilizer may occur. **See precautions and risk factors on page 18.**

TIP OPTIONS: Replaceable cast chrome tip (612-TIP-0711 & 612-TIP-0712) with carbide inserts on the nose and the wing for excellent penetration and wear resistance. Narrow carbide cutting edge on the wing for exceptional penetration. **Assemblies on this page include the tip.**

PACKER RECOMMENDATIONS:
2-1/4" (57mm) or wider.

OVERVIEW: Unique design of the tip provides low disturbance, low draft and smoother fields. Hard facing is placed on critical wear points to ensure a long-lasting holder and proper seed placement. The streamlined holder design reduces plugging and allows for better trash clearance.

NOTES: **Installation bolts sold separately.**
Use 3/8" x 2-1/4" Grade 8 carriage bolts. See page 116.

When installing use bolt holes pictured in Fig. 2.

For an expanded view of these openers see page 128.

680-ASY-0711G (SHOWN)
680-ASY-0711L

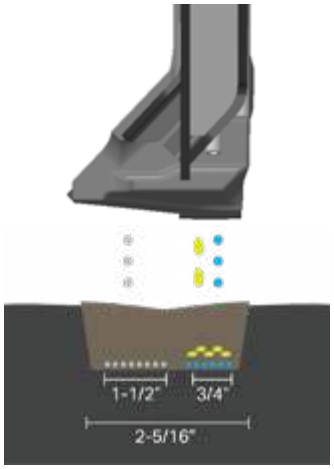

680-ASY-0711GP (SHOWN)
680-ASY-0711LP

SEED FERTILIZER LIQUID PHOS REAR VIEW

Drawings for illustration purposes only. All measurements shown are approximate. Results may vary with multiple factors including soil conditions, ground speed, application rates, fan speeds, and more. In less than ideal conditions, mixing between seed and fertilizer may occur. See precautions and risk factors on page 18.

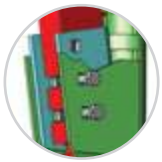

FIG. 2

ALL WINGS ON SIDE BAND OPENERS MUST BE POINTING INWARD TO CENTER OF SEEDING UNIT to prevent plugging when turning. Customers should order half left wing and half right wing openers.

Openers to Fit Bourgault PLS & PLX

Bourgault 3330SE Series & 3335QDA Series, TriMax™ Triple-Shoot System

G	G P	L	L P
680-ASY-2711G **680-ASY-2712G**	**680-ASY-2711GP** **680-ASY-2712GP**	**680-ASY-2711L** **680-ASY-2712L**	**680-ASY-2711LP** **680-ASY-2712LP**

SIDE BAND OPENERS

FITS: Bourgault PHD, XTC, QDA

SEED PLACEMENT: The seed is placed 3/4" (19mm) above and to the side of the fertilizer row, the tip's wing seals the fertilizer trench. The GP & LP openers deliver the liquid phos on top of the seed.

FERTILIZER PLACEMENT: Fertilizer is placed in the center 3/4" (19mm) below the seed bed. In less than ideal conditions, mixing between seed and fertilizer may occur. **See precautions and risk factors on page 18.**

TIP OPTIONS: Replaceable cast chrome tip (614-TIP-2711 & 614-TIP-2712) with extra long carbide inserts on the nose of the tip for excellent penetration and wear resistance. Top face of wing is covered with two carbide inserts and heel of fertilizer trench has a u-shaped carbide wafer, providing a longer wear life. **Assemblies on this page include the tip.**

PACKER RECOMMENDATION: 4-1/2" (114mm) Semi-Pneumatic Packer recommended. **V-Packer not recommended with these openers.**

OVERVIEW: Hard facing is placed on critical wear points to ensure a long-lasting holder and proper seed placement. The streamlined holder design reduces plugging and allows for better trash clearance.

NOTES: **Installation bolts sold separately.**
Use 3/8" x 2-1/4" Grade 8 carriage bolts. See page 116.

When installing use bolt holes pictured in Fig. 3.

For an expanded view of these openers see page 129.

FIG. 3

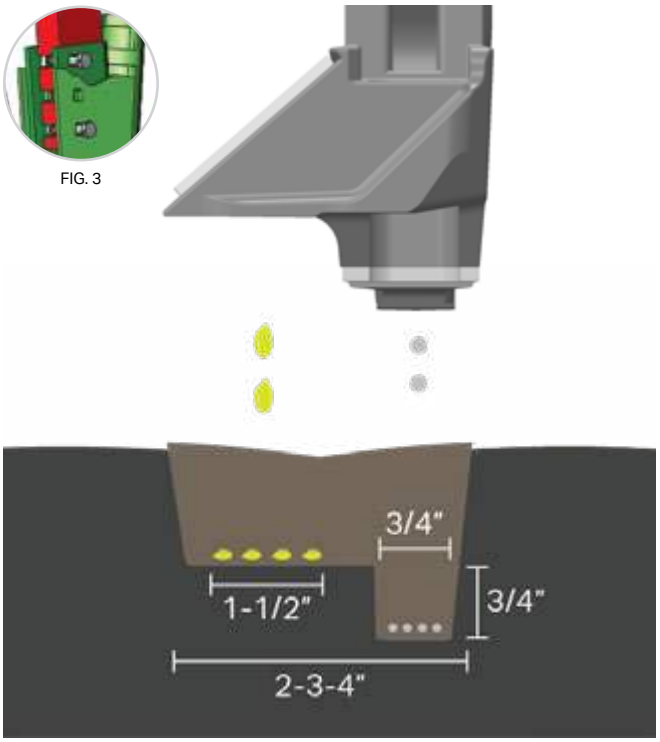

Drawings for illustration purposes only. All measurements shown are approximate. Results may vary with multiple factors including soil conditions, ground speed, application rates, fan speeds, and more. In less than ideal conditions, mixing between seed and fertilizer may occur. See precautions and risk factors on page 18.

ALL WINGS ON SIDE BAND OPENERS MUST BE POINTING INWARD TO CENTER OF SEEDING UNIT to prevent plugging when turning. Customers should order half left wing and half right wing openers.

680-ASY-0211

680-ASY-0211
680-ASY-0212

SIDE BAND OPENER

FITS: Bourgault TriMax™ Triple-Shoot System

FERTILIZER TYPE: Starter Fertilizer or Granular Phos

SEED PLACEMENT: The seed is placed in a 3/4" (19mm) band onto a firm seedbed. The starter fertilizer or Granular P is placed to the side onto a slightly lower shelf than the seed.

FERTILIZER PLACEMENT: Granular openers are fitted with a 1-1/4" (32mm) O.D. tube which places the granular phos or starter fertilizer to the side and slightly lower than the seed bed.

TIP OPTIONS: Replaceable cast chrome TriMax tip (612-TIP-0211 & 612-TIP-0212) with carbide inserts on the nose and the underside of the wing for excellent penetration and wear resistance. **Assemblies on this page include the tip.**

PACKER RECOMMENDATIONS: 4-1/2" (114mm) round or 5" (127mm) "U" and "VU" packers. The 4-1/2" V packer is not recommended.

NOTES: **Installation bolts sold separately.** Use 3/8" x 2-1/4" Grade 8 carriage bolts. See page 116. When installing on a Bourgault PHD use bolt holes pictured in Fig. 4A.

For an expanded view of these openers see page 126.

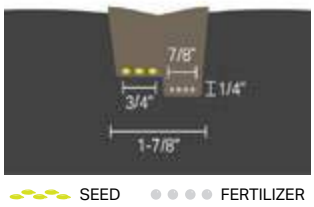

REAR VIEW

Drawings for illustration purposes only. All measurements shown are approximate. Results may vary with multiple factors including soil conditions, ground speed, application rates, fan speeds, and more. In less than ideal conditions, mixing between seed and fertilizer may occur. See precautions & risk factors on page 18.

FIG. 4A

FIG. 4

682-ASY-2063

682-ASY-2063
682-ASY-2064

SIDE BAND OPENER

FITS: Bourgault PHD, XTC, QDA

FERTILIZER TYPE: Double Shoot Liquid N.

SEED PLACEMENT: The slim body provides low draft and low soil disturbance for better trash clearance while ensuring great seed placement. The seed is placed in a 3/4" (19mm) band onto a firm, unfractured seedbed.

FERTILIZER PLACEMENT: Liquid N or Pressurized NH3 openers are fitted with a 1/4" (6mm) O.D. stainless steel tube which places fertilizer behind the wing and 1-1/2" (38mm) outward to the side away from the seed band. This provides increased separation of seed and fertilizer. In less than ideal conditions, mixing between seed and fertilizer may occur. **See precautions and risk factors on page 18.**

TIP OPTIONS: Cast chrome tip with extra long carbide inserts on the nose of the tip provides excellent penetration and wear resistance. Top face of the wing is covered with two carbide inserts providing a longer wear life. The tip is non-replaceable and welded to the seed boot.

PACKER RECOMMENDATIONS: 2-1/4" (57mm) or wider.

LIQUID PHOS OPTIONS: The P opener delivers liquid phos on top of the seed row. A 1/4" (6mm) stainless steel tube is welded to the back of the seed boot.

NOTES: **Installation bolts sold separately.** Use 3/8" x 2-1/4" Grade 8 carriage bolts. See page 116. When installing on a Bourgault PHD use bolt holes pictured in Fig. 4.

For an expanded view of these openers see page 126.

ALL WINGS ON SIDE BAND OPENERS MUST BE POINTING INWARD TO CENTER OF SEEDING UNIT to prevent plugging when turning. Customers should order half left wing and half right wing openers.

Openers to Fit Bourgault Mid Row Shank

050-MRA-5120 **050-MRA-5122**
050-MRA-5130 **050-MRA-5131**

FERTILIZER KNIFE

FITS: Bourgault MRS and stand alone fertilizer applicators

FERTILIZER TYPE: Granular + NH3, Granular + Liquid

TUBE SIZE:
NH3: 1/2" (12mm) O.D.
Liquid: 1/4" (6mm) O.D. stainless steel
Granular: 1-3/4" (44mm) O.D.

BOLT HOLE SPACING: 1-3/4" (44mm) shank bolt hole spacing.

TIP OPTIONS: N/A

OVERVIEW: This 1/2" wide low disturbance MRS fertilizer knife is a low maintenance alternative to Mid Row Banders. It has double carbide on the nose as well as hard facing above the carbide and on the sides for longer wear.

050-MRA-5120 applies NH3.
050-MRA-5122 applies two streams of NH3.
050-MRA-5130 applies both NH3 + Granular.
050-MRA-5131 applies both Liquid + Granular.

NOTES: **Installation bolts included.**
Torque dry 110 ft. lbs.
For other options see page 75.
For an expanded view of this opener see page 124.

Modular design allows you to replace worn parts instead of the entire opener.

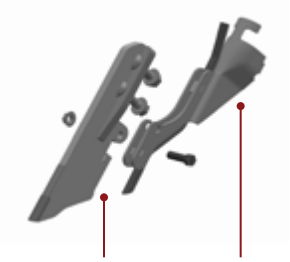

050-MRH-5175 + 050-MRF-0030
050-MRA-5130

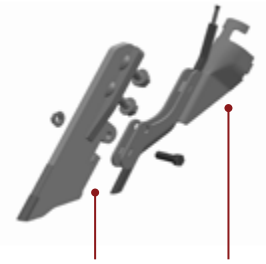

050-MRH-5175 + 050-MRF-0031
050-MRA-5131

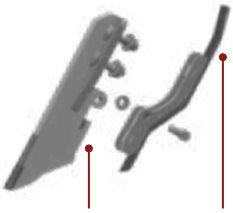

050-MRH-5175 + 050-MRF-0020
050-MRA-5120

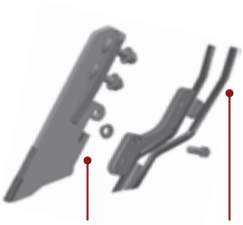

050-MRH-5175 + 050-MRF-0022
050-MRA-5122
DOUBLE NH3 TUBES FOR BLOW OFF

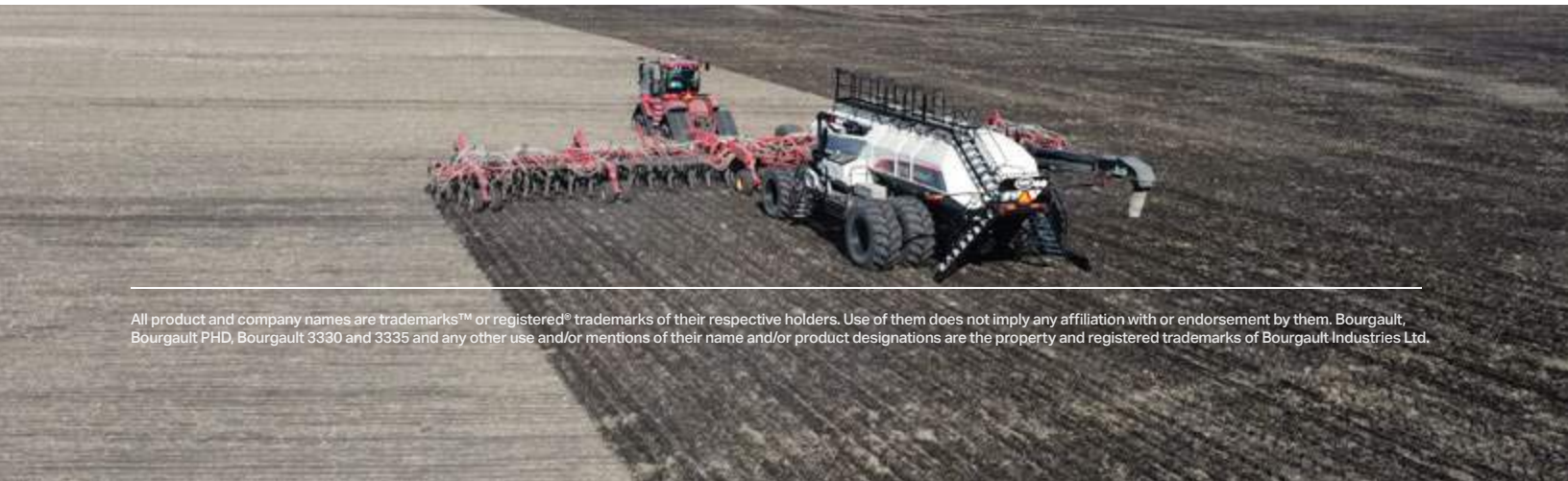

All product and company names are trademarks™ or registered® trademarks of their respective holders. Use of them does not imply any affiliation with or endorsement by them. Bourgault, Bourgault PHD, Bourgault 3330 and 3335 and any other use and/or mentions of their name and/or product designations are the property and registered trademarks of Bourgault Industries Ltd.

Openers to Fit CNH

Case IH, New Holland, Flexi-Coil & Concord

684-KNH-1010

SINGLE SHOOT OPENER

FITS: Case IH 800 / 900, New Holland P2070 / 2075, Flexi-Coil PD5700 / 7200

FERTILIZER TYPE: Starter Fertilizer w/ Seed Only

TUBE SIZE: 1-1/4" (32mm) O.D.

FIG. 5

TIP OPTIONS: Any 200 Series Single Shoot Replaceable Tip, allowing you to choose the right tip for your conditions. **Tips sold separately.** See pages 12-13.

OVERVIEW: This single shoot opener is designed to clear heavy trash build up, the narrow design allows for more accurate seed placement behind the tip. Extra hard surfacing on critical wear areas increases the life of the holder. This holder has an extra set of bolt holes on the body for deeper seed placement where required.

NOTES: **Installation bolts sold separately.** Use 1/2" x 2" Grade 8 hex head bolts. See page 118.

Standard installation uses the bottom holes (pictured red in Fig. 5). For 1.5" more depth use the top holes (pictured yellow in Fig. 5).

Install on left side of shank.

694-KNH-1000

SINGLE SHOOT OPENER

FITS: (84° Shanks Only) Case IH ATX 700, Flexi-Coil 5500, New Holland P2060

FERTILIZER TYPE: Starter Fertilizer w/ Seed or Seed w/ Liquid Phos

TUBE SIZE: Granular: 1-1/4" (32mm) O.D.

TIP OPTIONS: Any 200 Series Single Shoot Replaceable Tip, allowing you to choose the right tip for your conditions. Tip should not be wider than packer. **Tips sold separately.** See pages 12-13.

OVERVIEW: This single shoot opener applies Liquid Phosphorous on top of the seed, the narrow design allows for more accurate seed placement behind the tip. Extra-hard surfacing on critical wear areas increases the life of the holder.

NOTES: **Installation bolts sold separately.** Use 1/2" x 2-1/4" Grade 8 hex head bolts. See page 118.

All product and company names are trademarks™ or registered® trademarks of their respective holders. Use of them does not imply any affiliation with or endorsement by them. Case IH, New Holland, Flexi-Coil and any other use and/or mentions of their name and/or product designations are the property and registered trademarks of CNH Industrial America LLC. Concord and any other use and/or mentions of their name and/or product designations are the property and registered trademarks of Amity Technology.

684-ASY-2711G

684-ASY-2711L

G	G P	L	L P
684-ASY-2711G **684-ASY-2712G**	**684-ASY-2711GP** **684-ASY-2712GP**	**684-ASY-2711L** **684-ASY-2712L**	**684-ASY-2711LP** **684-ASY-2712LP**

SIDE BAND OPENERS

FITS: Case IH 800 / 900, NH P2070 / P2075, Flexi-Coil PD5700 / 7200

SEED PLACEMENT: The seed is placed 3/4" (19mm) above and to the side of the fertilizer row, the tip's wing seals the fertilizer trench and firms up the seed bed. The GP & LP openers deliver the liquid phos on top of the seed.

FIG. 6

FERTILIZER PLACEMENT: Fertilizer is placed in the center 3/4" (19mm) below the seed bed. In less than ideal conditions, mixing between seed and fertilizer may occur. **See precautions and risk factors on page 18.**

TIP OPTIONS: Replaceable cast chrome tip with extra long carbide inserts on the nose of the tip for excellent penetration and wear resistance. Top face of wing is covered with two carbide inserts and heel of fertilizer trench has a u-shaped carbide wafer, providing a longer wear life. **Assemblies on this page include the tip.**

PACKER RECOMMENDATION: 3" (76mm) or wider. **V-Packer not recommended.**

OVERVIEW: Hard facing is placed on critical wear points to ensure a long-lasting holder and proper seed placement. The streamlined holder design reduces plugging and allows for better trash clearance.

NOTES: **Installation bolts sold separately.** Use 1/2" x 2" Grade 8 hex head bolts. See page 118.

When installing 684 openers use bottom holes for standard installation (pictured red in Fig. 6). Use top holes to add 3° more pitch (pictured yellow in Fig. 6). For an expanded view of these openers see page 129.

ALL WINGS ON SIDE BAND OPENERS MUST BE POINTING INWARD TO CENTER OF SEEDING UNIT to prevent plugging when turning. Customers should order half left wing and half right wing openers. The holder is always bolted to the left side of the shank with the wings of the tip always facing the center of the drill.

SHOWN WITH
620-TIP-0510 &
620-SSH-1000

694-HLD-5000

TITAN OPENER SYSTEM

FITS: (84° Shanks Only) Case IH ATX 700, Concord, New Holland P2060, Flexi-Coil 5500

FERTILIZER TYPE: Multiple options. See pages 56-57.

OVERVIEW: This holder is part of the Titan Opener System, an innovative system giving you the most horizontal and vertical seed separation. This system gives you the flexibility to choose the right tip, seed shoe and fertilizer tubes for your needs. **Shown with 620-TIP-0510 and 620-SSH-1000.**

Components sold separately. See pages 56-57.

NOTES: **Installation bolts sold separately.** Use 1/2" x 2-12" Grade 8 hex head bolts. See page 118.

"We had problems with competitor openers plugging, wearing quickly and the plugging getting much worse. We installed new BTT openers this spring and we had zero plugging issues. The seed placement was great, and there was good separation between the midrow bander and the seed. We were very pleased to see 10-15% less horse power required with these openers. Our fuel consumption this seeding season was down considerably! I would highly recommend BTT openers. I was very happy with the service I received; the rep knew his stuff!

John Meagher, Loon Lake, Saskatchewan, Canada

Sustainable Farming.
Reduced Input Costs.

VOS (Versatile Opener System) Fits Horsch Sprinter & Co

1 Drill into a wide variety of situations across a range of soil types.

2 Minimal draft and soil disturbance due to low rake angle design.

3 Less draft and reduced wear rates at a lower cost per hectare.

4 More consistent seed and fertilizer placement for an even crop establishment.

5 Increased soil moisture retention.

"We had an existing Horsch 4m Sprinter with the standard "Duett" coulters, in 2015 we looked for an alternative system that caused less disturbance , but also gave us more consistency in seed depth.

We came across Bourgault Tillage Tools VOS at the Cereals event, the system looked right for us. Then with the explanation of how the tips worked, we decided to order a set for our Horsch Sprinter.

The BTT VOS has drilled a wide variety of products through the one tip (4" paired row), spring barley, beans, linseed, spring oats, vining peas, oilseed rape (canola) and wheat.

The VOS has also given us all the other benefits with a tip that causes less disturbance and consistency in seed placement, lower draft requirement, longevity of the product to name a few.

This drill remained with us on VOS until 2023. When it was time to think about changing the drill, for a new Horsch 6m Sprinter with a dual tank, having had the VOS system previously, there was no hesitation to upgrade the new drill to VOS fertilizer system.

The fertilizer was placed where we needed it on both the new & previous Horsch Sprinter systems using VOS.

Mike & James Porter
Porters Farms (Walpole) Suffolk, United Kingdom

Openers to Fit Horsch

Horsch Sprinter & Co

SHOWN WITH
200-TIP-0802

688-HLD-1000 W/ 200-TIP-0802

SINGLE SHOOT SEED OPENER

FITS: Horsch 84° Shank, ST and CO

FERTILIZER TYPE: Starter Fertilizer w/ Seed Only

TUBE SIZE: 1-1/4" (32mm) O.D.

TIP OPTIONS:
- 200-TIP-0802
- 200-TIP-1011
- 200-TIP-2011
- 200-TIP-3011
- 610-TIP-4030

Tips sold separately. See pages 12-14.

OVERVIEW: This single shoot opener has a narrow design allowing for more accurate seed placement behind the tip. Extra hard surfacing on critical wear areas increases the life of the holder. This holder comes with a second set of holes allowing you to adjust the pitch by 3° when required.

NOTES: **Installation bolts sold separately.** Use M16 x 55 10.9 hex head bolts. Standard installation uses the bottom holes (pictured red in Fig. 7), for 4° more pitch use the top holes (pictured yellow in Fig. 7).

Hose clamps used to secure seed hoses from drill are sold separately.

FIG. 7

SHOWN WITH
610-TIP-4030

688-HLD-1000 W/ 610-TIP-4030

SINGLE SHOOT SEED OPENER

FITS: Horsch 84° Shank, ST and CO

FERTILIZER TYPE: Starter Fertilizer w/ Seed Only

TIP OPTIONS:
- 200-TIP-0802
- 200-TIP-1011
- 200-TIP-2011
- 200-TIP-3011
- 610-TIP-4030

Tips sold separately. See pages 12-14.

OVERVIEW: This single shoot opener has a narrow design allowing for more accurate seed placement behind the tip. Extra hard surfacing on critical wear areas increases the life of the holder. This holder comes with a second set of holes allowing you to adjust the pitch by 3° when required.

Components sold separately. See pages 58-59.

NOTES: **Installation bolts sold separately.** Use M16 x 55 10.9 hex head bolts. Standard installation uses the bottom holes (pictured red in Fig. 7), for 4° more pitch use the top holes (pictured yellow in Fig. 7).

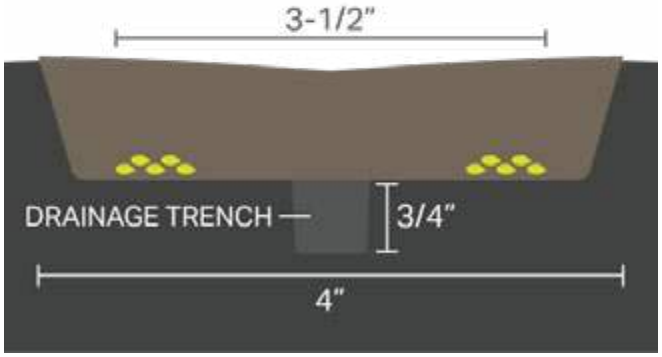

SEED FERTILIZER 610-TIP-4030

Drawings for illustration purposes only. All measurements shown are approximate. Results may vary with multiple factors including soil conditions, ground speed, application rates, fan speeds, and more. In less than ideal conditions, mixing between seed and fertilizer may occur. See precautions and risk factors on page 18.

SHOWN WITH
610-TIP-4030

SHOWN WITH
620-TIP-0510 &
620-SSH-1000

688-HLD-2000

PAIRED ROW OPENER

FITS: Horsch 84° Shank, ST and CO

SEED PLACEMENT: Seed is directed rearward through the tip which places the seed in two rows onto a firm, unfractured seedbed.

FERTILIZER PLACEMENT: Fertilizer is delivered on the same level, between the rows of seed. In less than ideal conditions, mixing between seed and fertilizer may occur. **See precautions and risk factors on page 18.**

TIP OPTIONS:
- 610-TIP-4041
- 610-TIP-4030

Tips sold separately. See page 14.

OVERVIEW: Hard facing is placed on critical wear points. The streamlined holder design reduces plugging and allows for better trash clearance. Designed for use with 1-1/4" (32mm) O.D. hose. These openers provide the flexibility to easily switch between granular and liquid fertilizer.

NOTES: **Installation bolts sold separately.** Purchase through your local dealer. Use M16 x 55 10.9 hex head bolts. Standard installation uses the bottom holes (pictured red in Fig. 8 on page 39), for 4° more pitch use the top holes (pictured yellow in Fig. 8).

688-HLD-5000

TITAN OPENER SYSTEM

FITS: Horsch 84° Shank, ST and CO

FERTILIZER TYPE: Multiple options. See pages 56-57.

OVERVIEW: This holder is part of the Titan Opener System, an innovative system giving you the most horizontal and vertical seed separation. This system gives you the flexibility to choose the right tip, seed shoe and fertilizer tubes for your needs.

Components sold separately. See pages 56-57. For a more detailed view of these components pages 134-135.

NOTES: **Installation bolts sold separately.** Purchase through your local dealer. Use M16 x 55 10.9 hex head bolts.

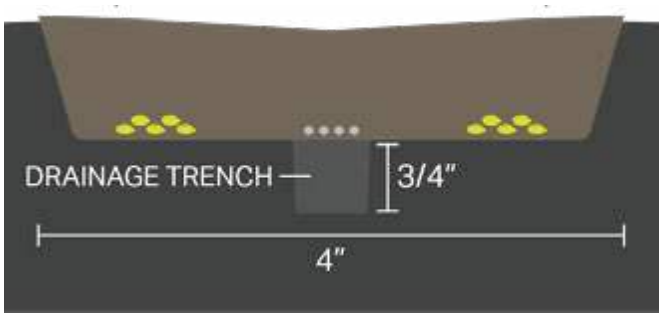

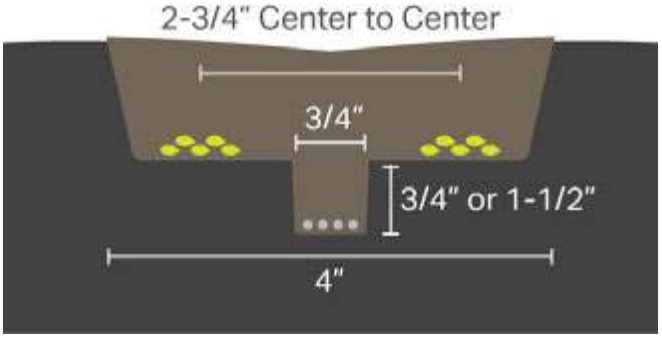

SEED
FERTILIZER

Drawings for illustration purposes only. All measurements shown are approximate. Results may vary with multiple factors including soil conditions, ground speed, fan speeds, application rates, and more. In less than ideal conditions, mixing between seed and fertilizer may occur. See precautions and risk factors on page 18.

All product and company names are trademarks™ or registered® trademarks of their respective holders. Use of them does not imply any affiliation with or endorsement by them. Horsch and any other use and/or mentions of their name and/or product designations are the property and registered trademarks of Horsch Maschinen GmbH.

SHOWN WITH
610-TIP-4082

688-HLD-2080 W/ 610-TIP-4082

VOS (VERSATILE OPENER SYSTEM)

FITS: Horsch 84° Shank, ST and CO

FERTILIZER TYPE: Multiple options. See pages 58-59.

TIP OPTIONS:
- 610-TIP-0802
- 610-TIP-3581
- 610-TIP-4035
- 610-TIP-4081
- 610-TIP-4082
- 610-TIP-4085
- 610-TIP-6082

FIG. 8

Tips sold separately. See pages 13-15.

OVERVIEW: This holder is part of the VOS (Versatile Opener System) which gives you the flexibility to choose the right tip and fertilizer tubes for your needs. This holder comes with a second set of holes allowing you to adjust the pitch by 3° when required.

Components sold separately. See pages 58-59.

NOTES: **Installation bolts sold separately.** Use M16 x 55 10.9 hex head bolts. Purchase through your local dealer.

Standard installation uses the bottom holes (pictured red in Fig. 8), for 4° more pitch use the top holes (pictured yellow).

610-TIP-4082

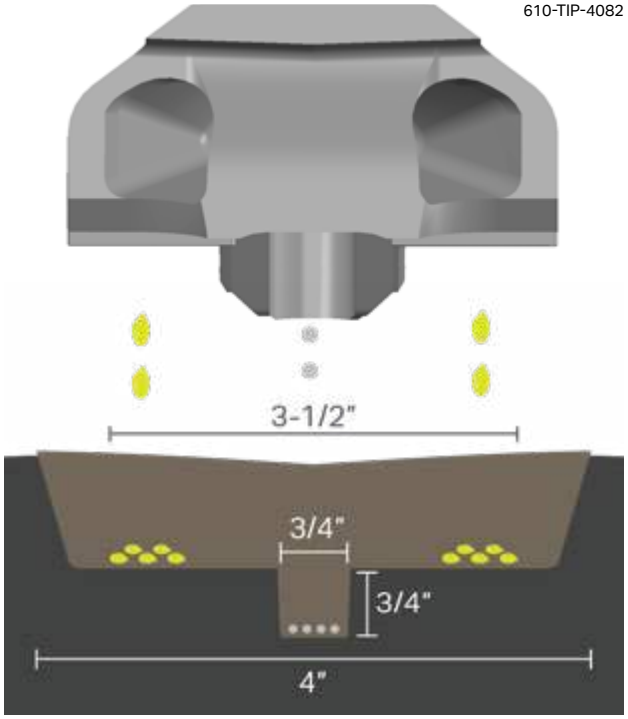

Fertilizer Knives to Fit John Deere

John Deere P500 & 1870 Conserva Pak Air-Hoe Drill

TIP OPTIONS:
- 200-TIP-0801
- 200-TIP-0802
- 200-TIP-0803
- 200-TIP-0811

Tips Sold Separately. See page 12.

OVERVIEW: The body and fertilizer tubes are narrow with additional hard-surfacing on critical wear areas to increase the life of the holder.

650-ACC-1000 bracket is required on single fertilizer knives and limits the tripping distance of the knives.

650-ACC-1010 bracket is required for 650-HLD-1000GN and 650-HLD-1000GL. Required on units prior to 2017.

Brackets sold separately. Mounting bolts included.
See page 130.

NOTES: Use roll pins to install. Must be purchased through your John Deere dealer.

For an expanded view of these openers see page 130.

All product and company names are trademarks™ or registered® trademarks of their respective holders. Use of them does not imply any affiliation with or endorsement by them. John Deere and 1870 Conserva Pak are the registered trademarks of Deere & Company.

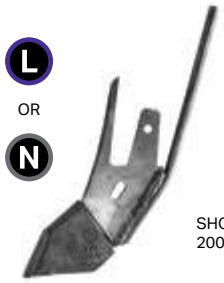

SHOWN WITH 200-TIP-0802

650-HLD-1001

FERTILIZER TYPE: Liquid or NH3

TUBE SIZE: 0.4" O.D. stainless steel pipe

NOTES: Use with 650-ACC-1000.

650-HLD-1000G

FERTILIZER TYPE: Granular

TUBE SIZE: 1-1/4" (32mm) O.D.

NOTES: Use with 650-ACC-1000.

650-HLD-1000L

FERTILIZER TYPE: Liquid

TUBE SIZE: 1/4" (6mm) O.D. stainless steel pipe

NOTES: Use with 650-ACC-1000.

650-HLD-1000N

FERTILIZER TYPE: NH3

TUBE SIZE: 1/2" (12mm) O.D. NH3 pipe

NOTES: Use with 650-ACC-1000.

650-HLD-1000GL

FERTILIZER TYPE: Granular + Liquid

TUBE SIZE: 1/4" (6mm) O.D. stainless steel and 1-1/4" (32mm) O.D. granular pipe

NOTES: Use with 650-ACC-1010.

650-HLD-1000GN

FERTILIZER TYPE: Granular + NH3

TUBE SIZE: 1/2" (12mm) O.D. NH3 and 1-1/4" (32mm) O.D. granular pipe

NOTES: Use with 650-ACC-1010.

650-ACC-1000

650-ACC-1010

Seed Openers to Fit John Deere

John Deere P500 & 1870 Conserva Pak Air-Hoe Drill

P

650-ASY-0711

***BUILD TO ORDER**

650-ASY-0711
650-ASY-0712
650-ASY-0711P*
650-ASY-0712P*

SIDE BAND OPENER

FERTILIZER TYPE: Starter Fertilizer w/ Seed or Seed w/ Liquid Phos

TUBE SIZE:
Granular: 1-1/4" (32mm) O.D. **Liquid Phos:** 3/16" (5mm) O.D. This can be converted to work with 1/4" (6mm) I.D.

TIP OPTIONS: Cast chrome tip (612-TIP-0711 & 612-TIP-0712) with carbide inserts on the nose and the wing for excellent penetration and wear resistance. The seed is placed in a 3/4" (19mm) band onto a firm, unfractured seed bed. **Assembly includes the tip.**

OVERVIEW: The seed is directed to the side through the holder which places the seed in one row off to the side on a firm, unfractured seed bed. Extra hard surfacing on critical wear areas increases the life of the holder.
For Liquid Phos option order 650-ASY-0711P / 0712P.

NOTES: Installation bolts sold separately.
Use M8x30 Class 10.9 carriage head bolts.
Purchase through your John Deere dealer.

For an expanded view of this opener see page 131.

P

650-ASY-3011

***BUILD TO ORDER**

650-ASY-3011
650-ASY-3011P*

PAIRED ROW OPENER

FERTILIZER TYPE: Starter Fertilizer w/ Seed or Seed w/ Liquid Phos

TUBE SIZE:
Granular: 1-1/4" (32mm) O.D. **Liquid Phos:** 3/16" (5mm) O.D. This can be converted to work with 1/4" (6mm) I.D.

TIP OPTIONS: 3" (76mm) cast chrome tip (200-TIP-3011) with carbide insert on the nose to fracture the ground. Carbide inserts on the underside of the wings maintain a sharp cutting edge. **Assembly includes the tip.**

OVERVIEW: The seed is directed rearward through the holder which places the seed in two rows onto a firm, unfractured seed bed. Extra hard surfacing on critical wear areas increases the life of the holder. **For Liquid Phos option order 650-ASY-3011P.**

NOTES: Installation bolts sold separately. Use M8x30 Class 10.9 carriage head bolts. Purchase through your John Deere dealer.

For an expanded view of this opener see page 131.

ALL WINGS ON SIDE BAND OPENERS MUST BE POINTING INWARD TO CENTER OF SEEDING UNIT
to prevent plugging when turning. Customers should order half left wing and half right wing openers.

MAXLIFE SCRAPERS

Check out scrapers to fit John Deere packers on page 97.

Seed Openers to Fit John Deere

John Deere P670 & P680 Precision Air-Hoe Drill

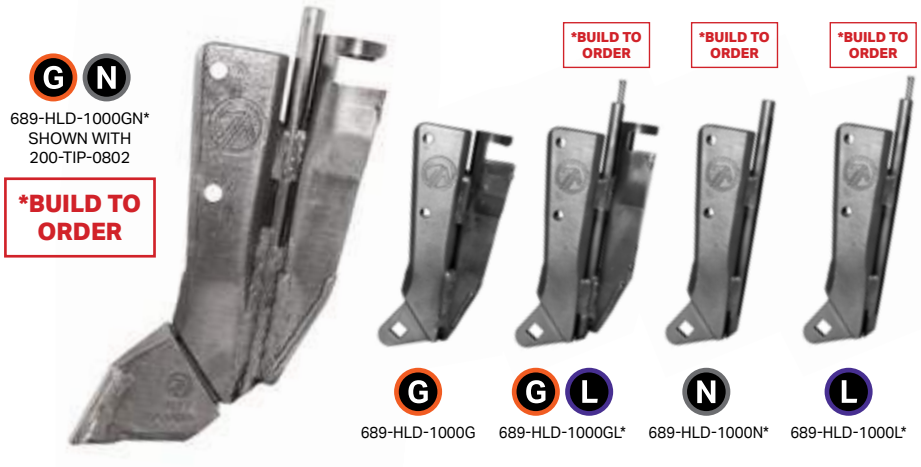

689-HLD-1000G
689-HLD-1000GN*
689-HLD-1000N
689-HLD-1000GL
689-HLD-1000L

FERTILIZER KNIVES

FERTILIZER TYPES: Granular N, Granular N + NH3, Granular N + Liquid N, NH3, Liquid N

TUBE SIZE:
Granular: 1-1/4" (32mm) O.D. **NH3:** 1/2" (12mm)
Liquid: 1/4" (6mm) O.D. stainless steel

TIP OPTIONS: Any 200 Series Single Shoot Replaceable Tip, allowing you to choose the right tip for your conditions. **Tips sold separately.** See pages 12-13.

OVERVIEW: These fertilizer knives are narrow with additional hard-surfacing on critical wear areas to increase the life of the holder.

NOTES: **Installation bolts included.** Use 3/8" lock nut and 3/8" x 1-3/4" Grade 8 carriage bolts. See page 118. For an expanded view of these openers see page 132. If using shields, longer bolts are required, use 3/8" x 2".

689-KNF-1000

SINGLE SHOOT SEED OPENER

FERTILIZER TYPE: Starter Fertilizer w/ Seed Only

TUBE SIZE: 1-1/4" (32mm) O.D.

OVERVIEW: The narrow design allows for more accurate seed placement behind the tip. Extra hard surfacing on critical wear areas increases the life of the holder.

NOTES: **Installation bolts included.** Use 3/8" lock nut and 3/8" x 1-1/2" Grade 8 carriage bolts. See page 118.
960-CRG-1505 & 907-NPF-3755

For guaranteed delivery of multi-shoot openers, place orders by January 31st.

All product and company names are trademarks™ or registered® trademarks of their respective holders. Use of them does not imply any affiliation with or endorsement by them. Seed Master Manufacturing and any other use and/or mentions of their name and/or product designations are the property and registered trademarks of Seed Master Manufacturing.

Why consider fall tillage?

It can improve your bottom line.

- Incorporates organic matter back into the soil, feeding soil microbes and improving soil health.
- Breaks up hard-pan to encourage strong root growth and allow spring snow melt to soak in.
- Suppresses stubborn weeds and reduces the possibility of chemical resistance.
- Aerates the soil, allowing oxygen and nutrients to flow through and feed microbes.
- Exposes black soil, warming soil quicker in the spring and promoting faster germination.
- Smooths uneven ground and wheel ruts while drying out wet fields.
- Saves time in the spring by applying fertilizer with fall tillage.

Check out our complete line of fall tillage products to fit most machine makes and models.

With the BTT Demo Program you can even try a few parts before you buy. See page 55 for details.

Blue Armour Sweeps
Page 84-90

***MAX LIFE™* Harrow Tines**
Page 98-101

Non-Freeze Fertilizer Knives
Page 71

Spikes
Page 87-92

***Niaux* 200 Disks**
Page 102-108

Openers to Fit Morris

Morris Maxim Edge On, Contour I, Contour II & Quantum

680-ASY-1000
SHOWN WITH
200-TIP-0801

680-ASY-1000P
SHOWN WITH
200-TIP-0802

680-ASY-1000 680-HLD-1000	680-ASY-1000P 680-HLD-1000P

SINGLE SHOOT OPENER

FITS: Morris Maxim Edge On

FERTILIZER TYPE: Starter Fertilizer w/ Seed or Seed w/ Liquid Phos

TUBE SIZE:
Granular: 1-1/4" (32mm) O.D.
Liquid Phos: 3/16" (5mm) O.D. Can be converted to work with 1/4" (6mm) I.D. delivery hoses with 880-ASY-1010. See page 114.

TIP OPTIONS: Any 200 Series Single Shoot Replaceable Tip, allowing you to choose the right tip for your conditions. **Tips sold separately.** See pages 12-13.

OVERVIEW: Liquid phos is delivered onto the seed bed, below the seed. Seed is delivered through the precision funnel opening. Front delivery provides precise seed delivery and reduces plugging with better soil flow. Extra hard surfacing on critical wear areas increases the life of the holder and reduces breakage in rocky conditions.

NOTES: **Installation bolts sold separately.** Use 3/8" x 2-1/4" Grade 8 carriage bolts. See page 116.

680-HLD-1000 and 680-HLD-1000P do not have bushings. For an expanded view of this opener see page 125.

***BUILD TO ORDER**

683-ASY-1000P*

P

693-ASY-1000P

683-ASY-1000P[1]* 683-KNH-1000[1]	693-ASY-1000P[2, 3] 693-KNH-1000[2, 3]

SINGLE SHOOT OPENER

FITS: [1]Morris Contour I, [2]Morris Contour II, [3]Morris Quantum

FERTILIZER TYPE: Starter Fertilizer w/ Seed or Liquid Phos w/ Seed

TUBE SIZE:
Granular: 1-1/4" (32mm) O.D.
Liquid Phos: 3/16" (5mm) O.D. Can be converted to work with 1/4" (6mm) I.D. delivery hoses with 880-ASY-1010. See page 114.

TIP OPTIONS: Any 200 Series Single Shoot Replaceable Tip, allowing you to choose the right tip for your conditions. **Tips sold separately.** See pages 12-13.

OVERVIEW: This single shoot opener applies liquid phos on top of the seed, the narrow design allows for more accurate seed placement behind the tip. Extra hard surfacing on critical wear areas increases the life of the holder.

683-KNH-1000 and 693-KNH-1000 are available without the liquid phos tubes.

NOTES: **Installation bolts sold separately.** Use 1/2" x 2" Grade 8 hex head bolts. See page 118.

For guaranteed delivery of multi-shoot openers, place orders by January 31st.

680-ASY-0711GP

680-ASY-0711LP

G	G P	L	L P
680-ASY-0711G **680-ASY-0712G**	**680-ASY-0711GP** **680-ASY-0712GP**	**680-ASY-0711L** **680-ASY-0712L**	**680-ASY-0711LP** **680-ASY-0712LP**

SIDE BAND OPENERS

FITS: Morris Maxim Edge On

SEED PLACEMENT: The seed is placed in a 3/4" (19mm) band onto a firm, unfractured seedbed. The GP and LP openers deliver the liquid phoshorus below the seed.

FERTILIZER PLACEMENT: Fertilizer is delivered in a band off to the side (right or left) on the same level as the seed. In less than ideal conditions, mixing between seed and fertilizer may occur. **See precautions and risk factors on page 18.**

TIP OPTIONS: Replaceable cast chrome tip (612-TIP-0711 & 612-TIP-0712) with carbide inserts on the nose and the wing for excellent penetration and wear resistance. Narrow carbide cutting edge on the wing for exceptional penetration. **Assemblies on this page include the tip.**

PACKER RECOMMENDATIONS:
2-1/4" (57mm) or wider.

OVERVIEW: Unique design of the tip provides low disturbance, low draft and smoother fields. Hard facing is placed on critical wear areas to ensure a long-lasting holder and proper seed placement.

The streamlined holder design reduces plugging and allows for better trash clearance.

Designed for use with 1-1/4" (31mm) O.D. hose. Bushings available for larger hoses. See page 114.

NOTES: **Installation bolts sold separately.**
Use 3/8" x 2-1/4" Grade 8 carriage bolts. See page 116.

For an expanded view of these openers see page 128.

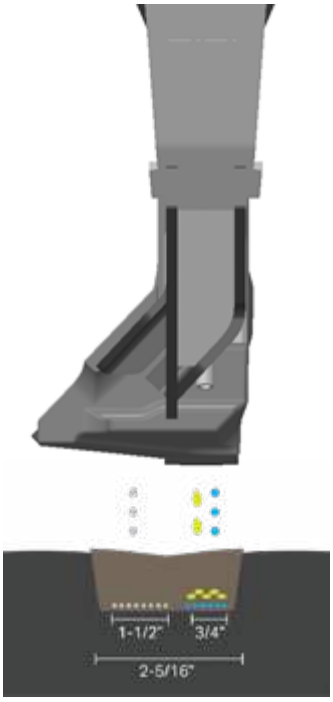

680-ASY-0711GP (SHOWN)
680-ASY-0711LP

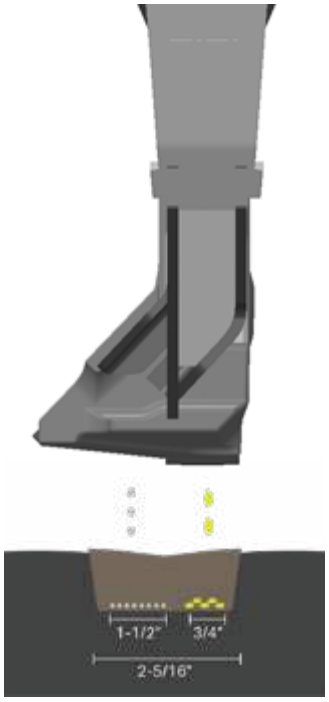

680-ASY-0711G (SHOWN)
680-ASY-0711L

SEED FERTILIZER LIQUID PHOS REAR VIEW

Drawings for illustration purposes only. All measurements shown are approximate. Results may vary with multiple factors including soil conditions, ground speed, application rates, fan speeds, and more. In less than ideal conditions, mixing between seed and fertilizer may occur. See precautions and risk factors on page 18.

ALL WINGS ON SIDE BAND OPENERS MUST BE POINTING INWARD TO CENTER OF SEEDING UNIT
to prevent plugging when turning. Customers should order half left wing and half right wing openers.

680-ASY-2711LP

683-ASY-2711G

G	G P	L	L P
680-ASY-2711G[1] 680-ASY-2712G[1]	680-ASY-2711GP[1] 680-ASY-2712GP[1]	680-ASY-2711L[1] 680-ASY-2712L[1]	680-ASY-2711LP[1] 680-ASY-2712LP[1]
683-ASY-2711G[2] 683-ASY-2712G[2]	683-ASY-2711GP[2] 683-ASY-2712GP[2]	683-ASY-2711L[2] 683-ASY-2712L[2]	683-ASY-2711LP[2] 683-ASY-2712LP[2]

SIDE BAND OPENERS

FITS: [1]Morris Maxim Edge On, [2]Morris Contour I

SEED PLACEMENT: The seed is placed 3/4" (19mm) above and to the side of the fertilizer row, the tip's wing seals the fertilizer trench. The GP and LP openers deliver the liquid phos on top of the seed.

FERTILIZER PLACEMENT: Fertilizer is placed in the center, 3/4" (19mm) below the seed bed. In less than ideal conditions, mixing between seed and fertilizer may occur. **See precautions and risk factors on page 18.**

TIP OPTIONS: Replaceable cast chrome tip with extra long carbide inserts on the nose for excellent penetration and wear resistance (614-TIP-2711 & 614-TIP-2712). Top face of wing is covered with two carbide inserts and heel of fertilizer trench has a u-shaped carbide wafer, providing a longer wear life. **Assemblies on this page include the tip.**

PACKER RECOMMENDATION: 3" (76mm) or wider. **V-Packer not recommended.**

OVERVIEW: Hard facing is placed on critical wear points to ensure a long-lasting holder and proper seed placement. The streamlined holder design reduces plugging and allows for better trash clearance. Designed for use with 1-1/4" (31mm) O.D. hose. Bushings available for larger hoses. See page 114.

NOTES: **Installation bolts sold separately.**
680 openers use 3/8" x 2-1/4" Grade 8 carriage bolts. See page 116. **683 openers** use 1/2" x 2" Grade 8 hex head bolts. See page 118.

For an expanded view of these openers see page 129.

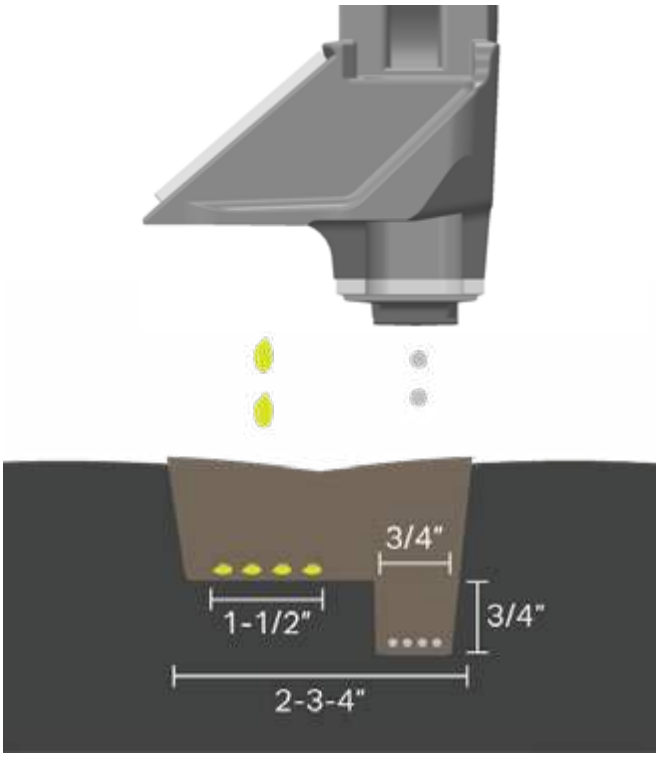

SEED FERTILIZER REAR VIEW

Drawings for illustration purposes only. All measurements shown are approximate. Results may vary with multiple factors including soil conditions, ground speed, application rates, fan speeds, and more. In less than ideal conditions, mixing between seed and fertilizer may occur. See precautions and risk factors on page 18.

ALL WINGS ON SIDE BAND OPENERS MUST BE POINTING INWARD TO CENTER OF SEEDING UNIT to prevent plugging when turning. Customers should order half left wing and half right wing openers.

693-HLD-2080
SHOWN WITH
610-TIP-4081

682-ASY-2063

693-HLD-2080

VOS (VERSATILE OPENER SYSTEM)

FITS: Morris Contour II, Morris Quantum

FERTILIZER TYPE: Multiple options. See pages 58-59.

OVERVIEW: This holder is part of the VOS (Versatile Opener System) which gives you the flexibility to choose the right tip and fertilizer tubes for your needs.

Components sold separately. See pages 58-59.

NOTES: **Installation bolts sold separately.**
Use 1/2" x 2" Grade 8 hex head bolts. See page 118.

Interested in BTT Products?
Try before you buy with the BTT Demo Program.
See page 55.

682-ASY-2063
682-ASY-2064

SIDE BAND OPENER

FITS: Morris Maxim Edge On

FERTILIZER TYPE: Double Shoot Liquid N. **For pressurized NH3 please see your pressurized system dealer for more information on tube sizing and inserts.**

SEED PLACEMENT: The slim body provides a low draft and low soil disturbance for better trash clearance, while ensuring great seed placement. The seed is placed in a 3/4" (19mm) band onto a firm, unfractured seedbed.

FERTILIZER PLACEMENT: Liquid N or Pressurized NH3 openers are fitted with a 1/4" (6mm) O.D. stainless steel tube which places fertilizer behind the wing and 1-1/2" (38mm) outward to the side away from the seed band. This provides increased separation of seed and fertilizer. In less than ideal conditions, mixing between seed and fertilizer may occur. **See precautions and risk factors on page 18.**

TIP OPTIONS: Cast chrome tip with extra long carbide inserts on the nose provides excellent penetration and wear resistance. Top face of the wing is covered with two carbide inserts providing a longer wear life. The tip is non-replaceable and welded to the seed boot.

PACKER RECOMMENDATIONS: 2-1/4" (57mm) or wider.

LIQUID PHOS OPTIONS: This opener delivers liquid phos on top of the seed row. A 1/4" (6mm) stainless steel tube is welded to the back of the seed boot.

NOTES: **Installation bolts sold separately.**
680-ACC-0001 is required for Concord Edge-On shanks & is sold separately.

Use 3/8" x 2-1/4" Grade 8 carriage bolts. See page 116.

For an expanded view of these openers see page 126.

ALL WINGS ON SIDE BAND OPENERS MUST BE POINTING INWARD TO CENTER OF SEEDING UNIT to prevent plugging when turning. Customers should order half left wing and half right wing openers.

G

***BUILD TO ORDER**

G

683-ASY-4020G[1*]	693-ASY-4020G[2]

PAIRED ROW OPENERS

FITS: [1]Morris Contour I, [2]Morris Contour II & Morris Quantum

SEED PLACEMENT: Seed is directed rearward through the tip which places the seed in two rows onto a firm, unfractured seedbed.

FERTILIZER PLACEMENT: Fertilizer is delivered on the same level, between the rows of seed. In less than ideal conditions, mixing between seed and fertilizer may occur. **See precautions and risk factors on page 18.**

TIP OPTIONS: Replaceable cast chrome tip (610-TIP-4041) with carbide inserts on the nose and narrow carbide on the cutting edges of the wings for great penetration. **Assemblies on this page include the tip.**

PACKER RECOMMENDATION:
4" (102mm) or wider.

OVERVIEW: Ultra-low draft, low disturbance and smoother fields. Hard facing is placed on critical wear points to ensure a long-lasting holder.

The streamlined holder design reduces plugging and allows for better trash clearance.

Designed for use with 1-1/4" (32mm) O.D. hose. Bushings available for larger hoses. See page 114.

These openers provide the flexibility to easily switch between Granular and Liquid fertilizer. The above openers are available with liquid phos options. Please call the factory for more information.

NOTES: **Installation bolts sold separately.**
Use 1/2" x 2" Grade 8 hex head bolts. See page 118.

For an expanded view of these openers see page 127.

610-TIP-4041

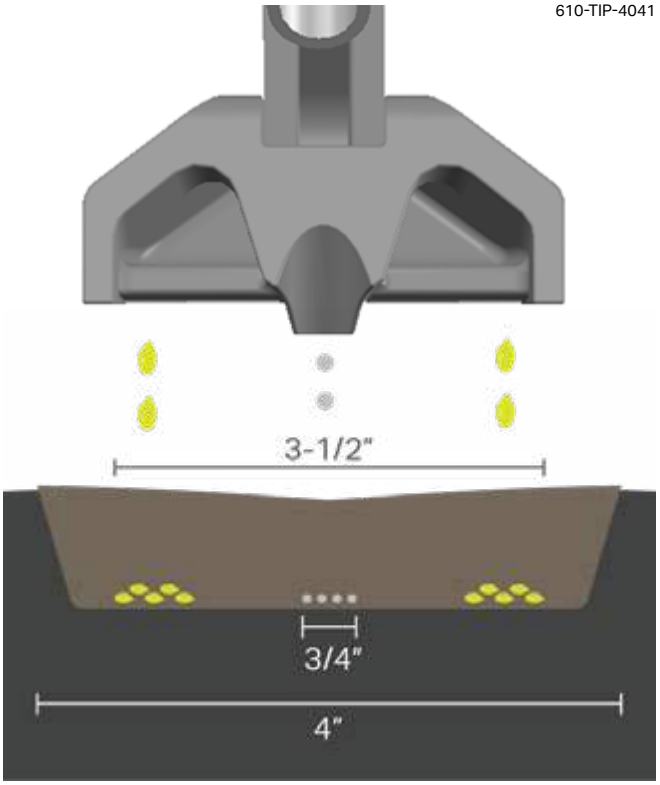

SEED FERTILIZER REAR VIEW

Drawings for illustration purposes only. All measurements shown are approximate. Results may vary with multiple factors including soil conditions, ground speed, application rates, fan speeds, and more. In less than ideal conditions, mixing between seed and fertilizer may occur. See precautions and risk factors on page 18.

All product and company names are trademarks™ or registered® trademarks of their respective holders. Use of them does not imply any affiliation with or endorsement by them. Morris, Morris Contour I, Morris Contour II, Morris Quantum, Morris Maxim and any other use and/or mentions of their name and/or product designations are the property and registered trademarks of Morris Industries Ltd.

Fertilizer Knives to Fit Salford

Salford Independent Series

FERTILIZER TYPES: Granular N, NH3, Liquid N, Granular N + NH3, Granular N + Liquid N

TUBE SIZE:
Granular: 1-1/2" (38mm) O.D.
NH3: 1/2" (12mm) O.D.
Liquid: 1/4" (6mm) O.D. stainless steel
Non-Freeze NH3: 1/2" (12mm) O.D.

TIP OPTIONS:
3/4" (19mm) tips:
- 600-TIP-7500
- 600-TIP-7501
- 600-TIP-7502

Tips sold separately. See page 17.

OVERVIEW: Fits 84° shanks. Body and fertilizer tubes are narrow with additional hard-surfacing on critical wear areas to increase the life of the holder. This opener features adjustment holes that allow you to adjust the height of the opener by 1.375" (35mm).

NON-FREEZE VERSION: NH3 is delivered through a nylon insert, insulating the NH3 from the knife. This prevents the moist soil from freezing and building up on the knife, keeping it narrow to reduce disturbance with minimal gassing off. Designed to work with Cold Flow NH3 units.

G

670-HLD-1000G
SHOWN WITH
600-TIP-7501

670-HLD-1000

N

670-HLD-1000HG

L

670-HLD-1000L

G
L

670-HLD-1000GL

N

670-ASY-7523
SHOWN WITH
600-TIP-7502

N

670-HLD-1000N

G
N

670-HLD-1000GN

All product and company names are trademarks™ or registered® trademarks of their respective holders. Use of them does not imply any affiliation with or endorsement by them. Salford and any other use and/or mentions of their name and/or product designations are the property and registered trademarks of Salford Group, Inc.

Openers to Fit Seed Master

Fertilizer Knives & Single Shoot Seed Openers

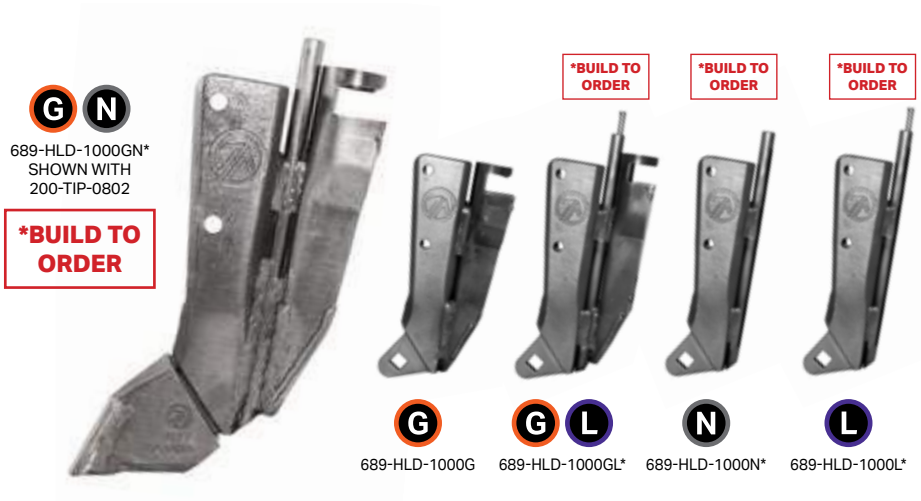

689-HLD-1000G 689-HLD-1000GN* 689-HLD-1000N 689-HLD-1000GL 689-HLD-1000L

FERTILIZER KNIVES

FERTILIZER TYPES: Granular N, Granular N + NH3, Granular N + Liquid N, NH3, Liquid N

TUBE SIZE:
Granular: 1-1/4" (32mm) O.D.
NH3: 1/2" (12mm)
Liquid: 1/4" (6mm) O.D. stainless steel

TIP OPTIONS: Any 200 Series Single Shoot Replaceable Tip, allowing you to choose the right tip for your conditions. **Tips sold separately.** See pages 12-13.

OVERVIEW: These fertilizer knives are narrow with additional hard-surfacing on critical wear areas to increase the life of the holder.

NOTES: **Installation bolts included.** Use 3/8" lock nut and 3/8" x 1-3/4" Grade 8 carriage bolts. See page 118. For an expanded view of these openers see page 132. If using shields, longer bolts are required, use 3/8" x 2".

689-KNF-1000

SINGLE SHOOT SEED OPENER

FERTILIZER TYPE: Starter Fertilizer w/ Seed Only

TUBE SIZE: 1-1/4" (32mm) O.D.

OVERVIEW: The narrow design allows for more accurate seed placement behind the tip. Extra hard surfacing on critical wear areas increases the life of the holder.

NOTES: **Installation bolts included.** Use 3/8" lock nut and 3/8" x 1-1/2" Grade 8 carriage bolts. (960-CRG-1505 & 907-NPF-3755) See page 118.

For guaranteed delivery of multi-shoot openers, place orders by January 31st.

All product and company names are trademarks™ or registered® trademarks of their respective holders. Use of them does not imply any affiliation with or endorsement by them. Seed Master Manufacturing and any other use and/or mentions of their name and/or product designations are the property and registered trademarks of Seed Master Manufacturing.

Fertilizer Knives to Fit Väderstad Seed Hawk

Granular N, Liquid N, NH3, Granular + Liquid N, Granular + NH3

FERTILIZER TYPES:
Granular N, Granular + Liquid N, Granular + NH3, Liquid N, NH3

TUBE SIZE:
Granular: 1-1/4" (32mm) O.D.
NH3: 1/2" (12mm) O.D.

Liquid: 1/4" (6mm) O.D.

TIP OPTIONS: N/A

OVERVIEW: Dual carbide insert on the nose to fracture the ground.

Body and fertilizer tubes are narrow with additional hard-surfacing on critical wear areas to increase the life of the holder.

NOTES: **Installation bolts sold separately.** Use 7/16" x 1-3/4" Grade 8 carriage bolts. See page 118.

G
1/2" WIDE
686-KNH-5020G

G L
1/2" WIDE
686-KNH-5020GL
***BUILD TO ORDER**

L
1/2" WIDE
686-KNH-5020L
***BUILD TO ORDER**

N
1/2" WIDE
686-KNH-5020N
***BUILD TO ORDER**

G N
1/2" WIDE
686-KNH-5020GN
***BUILD TO ORDER**

All product and company names are trademarks™ or registered® trademarks of their respective holders. Use of them does not imply any affiliation with or endorsement by them. Väderstad Seed Hawk and any other use and/or mentions of their name and/or product designations are the property and registered trademarks of Väderstad Seed Hawk.

G

686-HLD-1020G*
SHOWN WITH
200-TIP-0802

*BUILD TO ORDER

G L

686-HLD-1010GL*

*BUILD TO ORDER

L

686-HLD-1020L*

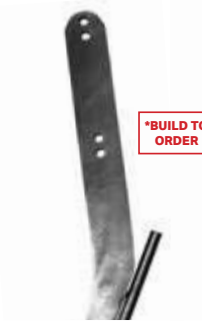

*BUILD TO ORDER

N

686-HLD-1020N*

*BUILD TO ORDER

G N

686-HLD-1010GN*

FERTILIZER TYPES:
Granular N, Granular + Liquid N, Granular + NH3, Liquid N, NH3

TUBE SIZE:
Granular: 1-1/4" (32mm) O.D.
NH3: 1/2" (12mm) O.D.
Liquid: 1/4" (6mm) O.D.

TIP OPTIONS:
- 200-TIP-0511
- 200-TIP-0801
- 200-TIP-0802
- 200-TIP-0803
- 200-TIP-0811

Tips sold separately. See page 12.

OVERVIEW: Body and fertilizer tubes are narrow with additional hard-surfacing on critical wear areas to increase the life of the holder.

686-HLD-1010 holders will apply Granular + Liquid N or NH3.

NOTES: Installation bolts sold separately. Use 7/16" x 1-3/4" Grade 8 carriage bolts. See page 118.

For an expanded view of these openers see page 133.

For guaranteed delivery of multi-shoot openers, place orders by January 31st.

"I've been running BTT parts for over 18 years. I currently run an 80' Vaderstad Seedhawk, but have used their parts on other drills in the past as well. The parts are phenomenal and are built to last. Competitor parts I've tried in the past have worn too quickly. Their service can't be beat, 11 on a scale from 1-10! Being in a tough clay soil type creates a problem from the start. I received follow up calls numerous times to ensure I was happy with how my openers were performing. The reps and service & warranty manager are the reason I won't buy anything other than BTT parts. Price doesn't matter. Their service is worth it.

Danton Soloducha, Indian Head, Saskatchewan, Canada

Seed Openers to Fit Väderstad Seed Hawk

Single Shoot & Paired Row Options

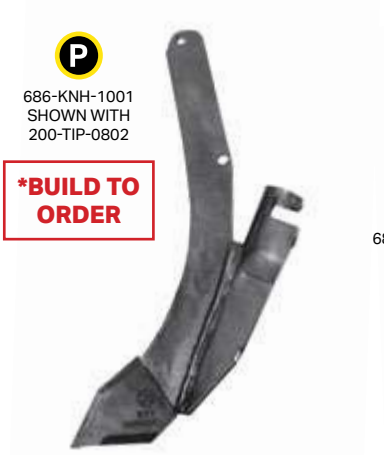

686-KNH-5010
686-KNH-5010P

1/2" WIDE SINGLE SHOOT OPENER

FITS: Väderstad Seed Hawk

FERTILIZER TYPE: Starter Fertilizer w/ Seed Only + Liquid Phos

TUBE SIZE:
Granular: 1-1/4" (32mm) O.D.
Liquid Phos: 3/16" (5mm) O.D.
This can be converted to work with 1/4" (6mm) I.D. delivery hoses with 880-ASY-1010. See page 114.

TIP OPTIONS: N/A

OVERVIEW: This 1/2" opener directs seed downward through the holder, placing the seed in a single row onto a firm, unfractured seed bed. Extra hard surfacing on critical wear areas increases the life of the holder.

686-KNH-5010 is available without the liquid phos tube.

686-KNH-5010P is the liquid phos opener.

NOTES: **Installation bolts sold separately.** Use 3/8" x 1-3/4" Grade 8 hex head bolts. See page 118.

686-KNH-1001*
686-KNH-1001P*

SINGLE SHOOT OPENER

FITS: Väderstad Seed Hawk

FERTILIZER TYPE: Starter Fertilizer w/ Seed Only + Liquid Phos or just Liquid Phos

TUBE SIZE:
Seed Tube: 1-1/4" (32mm) O.D.
Liquid Phos: 3/16" (5mm) O.D.
This can be converted to work with 1/4" (6mm) I.D. delivery hoses with 880-ASY-1010. See page 114.

TIP OPTIONS: Any 200 Series Single Shoot Replaceable Tip, allowing you to choose the right tip for your conditions. **Tips sold separately.** See pages 12-13.

OVERVIEW: The seed shank is offset to the fertilizer shank.

686-KNH-1001 is available without the liquid phos tube. **686-KNH-1001P** is a single shoot opener that applies liquid phos on top of the seed. The narrow design allows for more accurate seed placement behind the tip.

NOTES: **Installation bolts sold separately.** Use 3/8" x 1-3/4" Grade 8 hex head bolts. See page 118.

For an expanded view of this opener see page 133.

686-ASY-3011
686-ASY-3011P

PAIRED ROW OPENER

FITS: Väderstad Seed Hawk

FERTILIZER TYPE: Starter Fertilizer w/ Seed Only + Liquid Phos

TUBE SIZE:
Granular: 1-1/4" (32mm) O.D.
Liquid Phos: 3/16" (5mm) O.D.
This can be converted to work with 1/4" (6mm) I.D. delivery hoses with 880-ASY-1010. See page 114.

TIP OPTIONS: 3" (76mm) cast chrome tip (200-TIP-3011) with carbide insert on the nose to fracture the ground. Carbide inserts on the underside of the wings maintain a sharp cutting edge. **Assembly includes the tip.**

OVERVIEW: The seed is directed rearward through the holder which places the seed in two rows onto a firm, unfractured seed bed. Extra hard surfacing on critical wear areas increases the life of the holder.

686-ASY-3011P is the liquid phos opener.

NOTES: **Installation bolts sold separately.** Use 3/8" x 1-3/4" Grade 8 hex head bolts. See page 118. *Will not fit older Seed Hawk drills.

For an expanded view of this opener see page 133.

For guaranteed delivery of multi-shoot openers, place orders by January 31st.

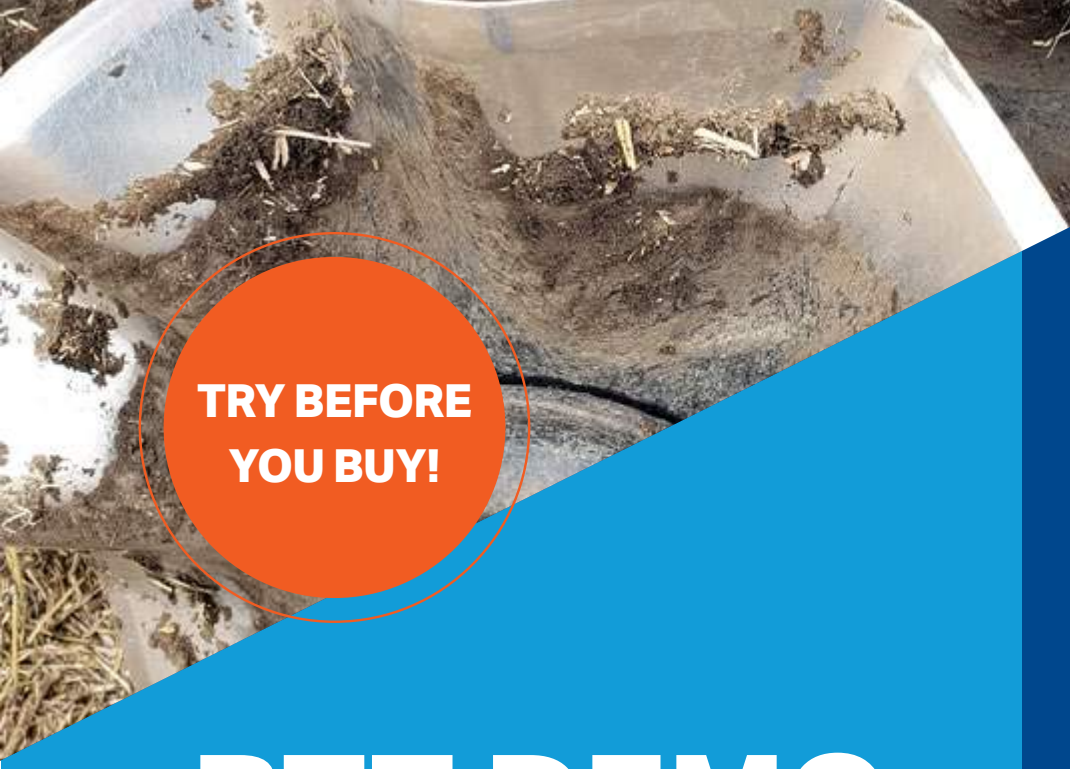

TRY BEFORE YOU BUY!

BTT DEMO PROGRAM

Through the BTT Demo Program, we offer you the opportunity to try a few of our parts and compare how they perform against products you're currently using.

No pressure.
No obligation to buy.

Talk to a BTT dealer or contact our team at 1.800.878.7714 or info@tillagetools.ca

Titan Opener System

This system provides both horizontal and vertical separation between seed and fertilizer.

1 CHOOSE YOUR **HOLDER**

See picture of assembly on page 25.

620-HLD-5000

FITS: 47° and 50° C-shank

Installation bolts and nuts included.

See picture of assembly on page 38.

688-HLD-5000

FITS: Horsch 84° shank. See note on page 130.

Installation bolts and nuts included.

See picture of assembly on page 35.

694-HLD-5000

FITS: Case IH ATX 700, NH P2060, Flexi-Coil 5500 & Concord Edge On (84° shanks only). When installing on units other than Concord, insert **694-ACC-1000** is needed. See page 114. Installation bolts and nuts included.

2 CHOOSE YOUR **SEED SHOE**

620-SSH-1000

4" outside to outside (2-3/4" center to center) seed spread is placed above the center placed fertilizer trench.

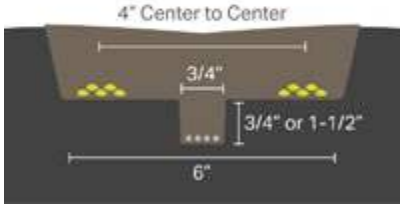

620-SSH-4000

6" outside to outside (4" center to center) seed spread is placed above the center placed fertilizer trench.

620-SSH-6000

7-3/4" outside to outside (6" center to center) seed spread is placed above the center placed fertilizer trench.

Use bolt and nut combo 620-BNC-3100 to install shoes to holder. For a more detailed view of these components see pages 134-135.

> Before using BTT openers, we were running an OEM opener and having issues with excessive component wear and breakage. We switched to the Titan Series Openers and have changed one assembly in about 7,000 acres. Which is remarkable in itself, but honestly, we could hardly see a difference in wear from new to old. Great product! Well worth the investment.
>
> **Trevor Smith, Washington, USA**

3 CHOOSE YOUR **TIP**

620-TIP-0510

Standard tip for **620, 688 & 694** holders. Carbide inserts are placed on the nose. Hard facing is placed on critical wear points for extended life of the tip.

NOTES: Use bolt and nut combo 200-BNC-3100 to install tips. Use bolt and nut combo 620-BNC-3100 (5/16" x 1-1/2") to install shoe to holder.

620-TIP-1510

Full cast version of 620-TIP-0510 for use with **620, 688 & 694** holders. This tip is longer lasting with superior soil flow around the tip when compared to the welded 620-TIP-0510 tip. Carbide inserts are placed on the nose. Hard facing is placed on critical wear points for extended life of the tip.

NOTES: Use bolt and nut combo 200-BNC-3100 to install tips. Use bolt and nut combo 620-BNC-3100 (5/16" x 1-1/2") to install shoe to holder.

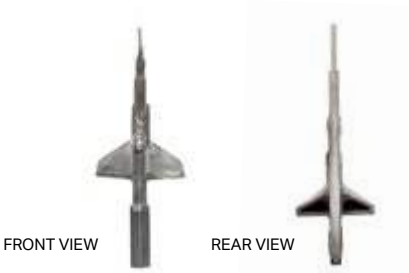

620-TIP-4060

Triple shoot unibody tip and seed shoe. Extra-long carbide inserts placed on the nose of the tip. The nose carbides have a continuous roofed profile, producing exceptional soil flow with minimal disturbance. The seed is placed in a distinct paired row, 2-3/4" center to center. The seed is deposited prior to the Aqua NH3 + Liquid Phos being placed 3/4" deeper, between the seed rows. The tip helps prevent skewing on hill sides. The shoe portion is 4" wide, with carbide fully covering the leading edges.

NOTES: This tip replaces the standard tip, seed shoe, fertilizer tube combinations, and is to be used with **620, 688 & 694** holders. Use bolt and nut combo 200-BNC-3100 to install tips.

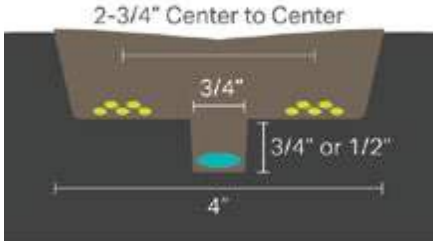

SEED FERTILIZER

Drawings for illustration purposes only. All measurements shown are approximate. Results may vary with multiple factors including soil conditions, ground speed, application rates, fan speeds, and more. In less than ideal conditions, mixing between seed and fertilizer may occur. See precautions and risk factors on page 18.

4 CHOOSE YOUR **FERTILIZER**

620-TUB-1021* (N)

1/2" (12mm) O.D. NH3 tube for **620, 688 & 694** series holders.

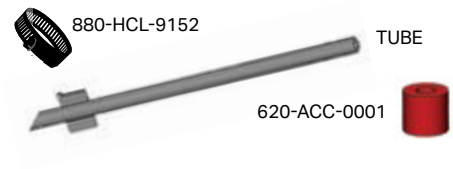

620-TUB-1070 (N) (P)

1/4" (6mm) O.D. Aqua NH3 + Phos tube for **620, 688 & 694** series holders.

620-TUB-4000 (N) (L)

0.4" O.D. Stainless Steel Liquid or NH3 tube for **620, 688 & 694** series holders.

620-TUB-4040 (N) (P)

0.4" O.D. Stainless Steel Aqua NH3 + Phos tube for **620, 688 & 694** series holders.

NOTES: The tube assemblies include all accessories shown.

*For pressurized NH3 Systems (including MaxQuip) you will be given the standard NH3 tube and then must consult with your pressurized system dealer for tubing inserts.

VOS

Choose the holder, tip, and fertilizer suitable for your situation and soil type.

1 CHOOSE YOUR **HOLDER**

See picture of assembly on page 25.

610-HLD-2080HD

FITS: 47° and 50° C-shank
When installing on a 50° shank other than Bourgault or Ezee-On use wedge 880-WDG-0300 or 880-WDG-0301. See page 114.

See picture of assembly on page 39.

688-HLD-2080

FITS: Horsch 84° shank, ST and CO. Use the bottom two holes when installing this holder for standard installation. To add 4° more pitch, use the top two holes on the holder.

See picture of assembly on page 48.

693-HLD-2080

FITS: Morris Contour II & Morris Quantum

2 CHOOSE YOUR **TIP**

610-TIP-0802

SINGLE SHOOT TIP

3/4" (19mm) long-wearing single shoot tip with long carbide insert on the nose for highly abrasive conditions.

FERTILIZER OPTIONS: Used for seeding only.

PACKER RECOMMENDATION: 3/4" (19mm) or wider.

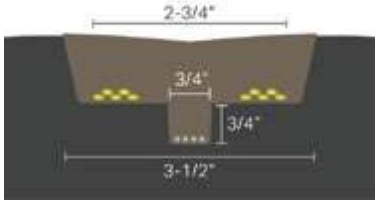

610-TIP-3581

PAIRED ROW TIP

3-1/2" (89mm) cast chrome paired row tip with 3/4" (19mm) vertical seed/fertilizer separation. Carbide insert on the nose for excellent penetration and wear resistance. Carbide inserts on the underside of the wing maintain a sharp cutting edge and provide extra-wear life. Carbide inserts at the back of the underside of the wings seals up fertilizer trench prior to seed placement.

FERTILIZER OPTIONS: Granular, Liquid, Aqua NH3 or Aqua NH3 + Phos

PACKER RECOMMENDATION: 3" (76mm) or wider.

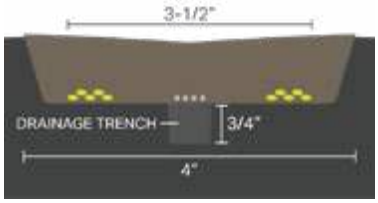

610-TIP-4035

PAIRED ROW TIP

4" (102mm) paired row cast tip with carbide insert on the nose for excellent penetration and wear resistance. These tips have a 3/4" (19mm) vertical drainage trench. Carbide inserts on the underside of the wing to maintain a sharp cutting edge. This paired row liquid or granular double shoot tip has no vertical seed/fertilizer separation.

FERTILIZER OPTIONS: Granular or Liquid

PACKER RECOMMENDATION: 4" (102mm) or wider.

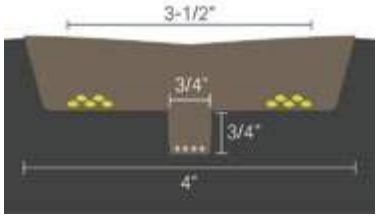

610-TIP-4081 / 4082 / 4085

PAIRED ROW TIP

4" (102mm) paired row tip with 3/4" (19mm) vertical seed/fertilizer separation. Extra long nose carbide, narrow carbide on the cutting edges of the wings and under the wing to seal the fertilizer trench, and firm up the seed bed prior to seed placement. **610-TIP-4082** has additional carbide along the sides of the fertilizer trench to provide extra wear life. **Not recommended for use on Case IH 800 / 900 or NH P2070.**

610-TIP-4085 for Europe only.

FERTILIZER OPTIONS: Granular, Liquid, Aqua NH3 or Aqua NH3 + Phos

PACKER RECOMMENDATION: 4" (102mm) or wider.

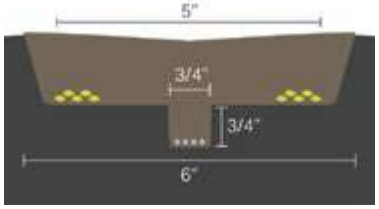

610-TIP-6082

PAIRED ROW TIP

OVERVIEW: 6" (152mm) paired row cast tip with 3/4" (19mm) vertical seed/fertilizer separation. Carbide insert on the nose for excellent penetration and wear resistance. Carbide inserts on the underside of the wing maintain a sharp cutting edge and provide extra-wear life. Carbide inserts at the back of the underside of the wings seals up fertilizer trench prior to seed placement.

FERTILIZER OPTIONS: Granular, Liquid, Aqua NH3 or Aqua NH3 + Phos

PACKER RECOMMENDATION: 5-1/2" (140mm) or wider.

SEED FERTILIZER

Drawings for illustration purposes only. All measurements shown are approximate. Results may vary with multiple factors including soil conditions, ground speed, application rates, fan speeds, and more. In less than ideal conditions, mixing between seed and fertilizer may occur. See precautions and risk factors on page 18.

3 CHOOSE YOUR **FERTILIZER**

880-TUB-1003[1]
880-TUB-1004[2] L

LIQUID 1/4" (6mm) O.D. stainless tube

880-TUB-1009[1]
880-TUB-1010[2] N L

LIQUID OR AQUA NH3 0.40" (10mm) O.D. stainless tube

880-TUB-1011[1]
880-TUB-1012[2] N P

AQUA NH3 + PHOS 1/4" (6mm) O.D. stainless tube

NOTES: **All tubes come with bushings as pictured above.** [1]880-TUB-1003, 1009 & 1011 are for everything other than C-shank. [2]880-TUB-1004, 1010 & 1012 are for C-shank openers, and are 1" longer. Call the factory for more details.

PROPER INSTALLATION:

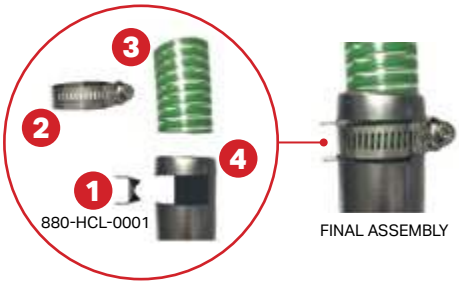

> We'd been min-tilling OSR ground and found that producing satisfactory seedbeds that would allow for the timely and reliable establishment of the crop without them drying out and losing moisture was becoming more and more difficult to achieve. I'd looked at a number of competing drill coulters but was always drawn back to the level of low disturbance of the VOS. We spent a few hours with Stuart discussing how the coulter would work and the types of soil conditions we'd expect to be working in, and we finally concluded the VOS would suit our needs. We have to date achieved an acreage of 4,655 and believe we will successfully break the 5,000 acre barrier.
>
> **James Mayes, Bentfield Bury Farms (Sentry Ltd), UK**

Seeding Openers to Fit *Speed-Loc™*

Single Shoot & Side Band Options

200-HOE-1700

SINGLE SHOOT OPENER

FITS: 200 Series *Speed-Loc™*

FERTILIZER TYPE: N/A

TUBE SIZE: N/A

TIP OPTIONS: Long-wearing welded high-chrome tip.

INSTALLATION DRIVER: 100-DRV-1020

OVERVIEW: This opener runs through the ground at a fairly vertical angle to provide less rock pulling. Provides 1-1/2" to 1-3/4" (38–44mm) seed spread.

Works best with the 1" (25mm) single tube seed boot. See pages 64-65.

200-KNF-0810
200-KNF-0811

SINGLE SHOOT OPENER

FITS: 200 Series *Speed-Loc™*

FERTILIZER TYPE: N/A

TUBE SIZE: N/A

TIP OPTIONS:
3/4" (19mm) weld-on tips:
- 200-KNF-0810 (without carbide)
- 200-KNF-0811 (with carbide)

INSTALLATION DRIVER: 400-DRV-1010

OVERVIEW: Low disturbance, low draft opener provides easy pulling.

Works with 300-ATM-1035 of the Seed Boot System. See pages 64-65.

200-KNF-0813

SINGLE SHOOT OPENER

FITS: 200 Series *Speed-Loc™*

FERTILIZER TYPE: N/A

TUBE SIZE: N/A

TIP OPTIONS: 3/4" (19mm) weld-on tip with extra-long nose carbide for longer wear life.

INSTALLATION DRIVER: 400-DRV-1010

OVERVIEW: The more vertical approach of this opener reduces rock pulling.

Works with 300-ATM-1035 of the Seed Boot System. See pages 64-65.

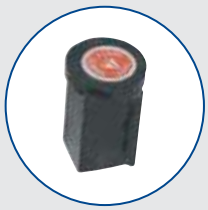

To ensure proper installation of *Speed-Loc™* products, use the appropriate driver listed with each product. For a chart of all drivers see page 80.

The Speed Release Tool 200-REL-1010 must be used when removing openers, sweeps and spikes from *Speed-Loc™* Adapters. See page 80.

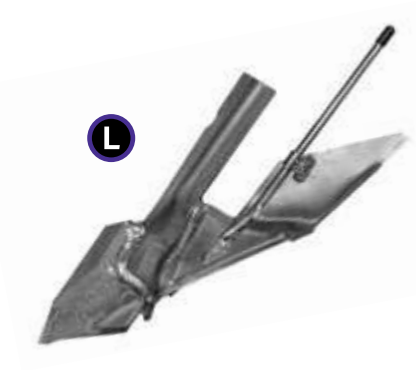

200-KNF-0863

SIDE BAND OPENER

FITS: 200 Series *Speed-Loc™*

FERTILIZER TYPE: Liquid N

TUBE SIZE: 1/4" (6mm) O.D.

TIP OPTIONS: The welded high-chrome tip is protected with a carbide insert on the nose and a solid carbide wing. The carbide placement provides sharp cutting edges for excellent penetration.

INSTALLATION DRIVER: 100-DRV-1010

OVERVIEW: This is the only multi-shoot opener available for use with the *Speed-Loc* system. It provides all of the benefits of the *Speed-Loc* system with the seed placement you trust.

This unique side band opener provides good horizontal separation with a slight vertical seed/fertilizer separation.

These openers work very well when used with a pressurized liquid system.

200-KNF-7501

SINGLE SHOOT OPENER

FITS: 200 Series *Speed-Loc™*

FERTILIZER TYPE: N/A

TUBE SIZE: N/A

TIP OPTIONS: The high-chrome welded tip has a carbide insert on the nose for a sharp cutting edge and extra wear life.

INSTALLATION DRIVER: 100-DRV-1010

OVERVIEW: Designed for use with the Technotill System.

200-KNF-7511

SINGLE SHOOT OPENER

FITS: 200 Series *Speed-Loc™*

FERTILIZER TYPE: Seed with Granular starter

TUBE SIZE: N/A

TIP OPTIONS: 3/4" (19mm) weld-on tip with carbide for longer wear life.

INSTALLATION DRIVER: 100-DRV-1010

OVERVIEW: Precise seed placement due to the funnel being close to the tip and to the bottom of the furrow. The funnel is reinforced with hard surfacing for longer wear life.

Works with the square tube seed boot of the Seed Boot System. It also fits the Bourgault or Flexi-Coil square tube seed boot. See pages 64-65.

Interested in BTT Products?

Try before you buy with the BTT Demo Program. **See page 55.**

200-KNH-4000

SINGLE SHOOT OPENER

FITS: 200 Series *Speed-Loc™*

FERTILIZER TYPE: N/A

TUBE SIZE: N/A

TIP OPTIONS: Any 200 Series Single Shoot Replaceable Tip, allowing you to choose the right tip for your conditions. **Tips sold separately.** See pages 12-13.

INSTALLATION DRIVER: Depends on tip used. See page 80.

OVERVIEW: Works with knife attachement 300-ATM-1035 of the Seed Boot System. See pages 64-65.

200-KNH-4010

SINGLE SHOOT OPENER

FITS: 200 Series *Speed-Loc™*

FERTILIZER TYPE: N/A

TUBE SIZE: N/A

TIP OPTIONS: Any 200 Series Single Shoot Replaceable Tip, allowing you to choose the right tip for your conditions. **Tips sold separately.** See pages 12-13.

INSTALLATION DRIVER: Depends on tip used. See page 80.

OVERVIEW: This funnel is reinforced with hard surfacing for longer wear life.

Works with the square tube seed boots of the Seed Boot System. It also fits the Bourgault or Flexi-Coil square tube seed boot. See pages 64-65.

410-KNF-0801

SINGLE SHOOT OPENER

FITS: 410 Series *Speed-Loc™*

FERTILIZER TYPE: N/A

TUBE SIZE: N/A

TIP OPTIONS: 3/4" (19mm) weld-on tip with carbide.

INSTALLATION DRIVER: 400-DRV-1010

OVERVIEW: Low disturbance, low draft opener provides easy pulling.

Works with knife attachment 300-ATM-1031 of the Seed Boot System. See pages 64-65.

> We use the *Speed-Loc™* Quick Change System on our deep tillage equipment. Very handy and don't have to worry about loosing any shovels. All we use is Bourgault Tillage Tools. The openers on our 8810 have hardly had any wear in the 1,500 acres we did and will be able to use them for next season too. Tough, rugged and reliable!
>
> **Trevor Nolan, Manitoba, Canada**

200-VRT-1040

SINGLE SHOOT OPENER

FITS: 200 Series *Speed-Loc™*

FERTILIZER TYPE: Granular

TUBE SIZE: 1-1/4" (32mm) O.D.

TIP OPTIONS: 1" (25mm) weld-on tip with nose carbide for long-lasting wear life and excellent penetration.

INSTALLATION DRIVER: 200-DRV-1030

OVERVIEW: The vertical approach of this opener reduces rock pulling and soil throw.

200-SPN-0200
200-SPN-0208

SINGLE SHOOT OPENER

FITS: 200 Series *Speed-Loc™*

FERTILIZER TYPE: N/A

TUBE SIZE: N/A

TIP OPTIONS: N/A

INSTALLATION DRIVER: 400-DRV-1000

OVERVIEW: These spoons have a 2" (51mm) spread.

200-SPN-0200 has 1/4" (6mm) material.

200-SPN-0208 has 5/16" (8mm) material for increased wear life.

200-SPN-0300
200-SPN-0308

SINGLE SHOOT OPENER

FITS: 200 Series *Speed-Loc™*

FERTILIZER TYPE: N/A

TUBE SIZE: N/A

TIP OPTIONS: N/A

INSTALLATION DRIVER: 400-DRV-1000

OVERVIEW: 3" (76mm) spread.

200-SPN-0300 has 1/4" (6mm) material.

200-SPN-0308 has 5/16" (8mm) material for increased wear life.

410-SPN-0300
410-SPN-0308

SINGLE SHOOT OPENER

FITS: 410 Series *Speed-Loc™*

FERTILIZER TYPE: N/A

TUBE SIZE: N/A

TIP OPTIONS: N/A

INSTALLATION DRIVER: 400-DRV-1000

OVERVIEW: 3" (76mm) spread.

410-SPN-0300 has 1/4" (6mm) material.

410-SPN-0308 has 5/16" (8mm) material for increased wear life.

For guaranteed delivery of multi-shoot openers, place orders by January 31st.

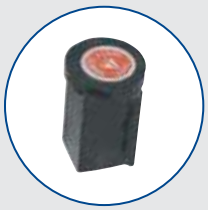

To ensure proper installation of *Speed-Loc™* products, use the appropriate driver listed with each product. For a chart of all drivers see page 80.

The Speed Release Tool 200-REL-1010 must be used when removing openers, sweeps and spikes from *Speed-Loc™* Adapters. See page 80.

Quick Change Seed Boot System

Match seed spread to opener width.

The quick-change seed boot system consists of two parts: the seed boot holder, which bolts onto the back of the shank, and the seed boot attachment, which fits into the holder. A nut and bolt secure the attachment.

There are seven different interchangeable attachments to choose from, each giving a different seed spread pattern. This system allows you to match your seed spread to the width of the opener you are using.

It is perfect for producers who want to switch back and forth from a wide seed spread behind a sweep to a narrow seed band behind a knife.

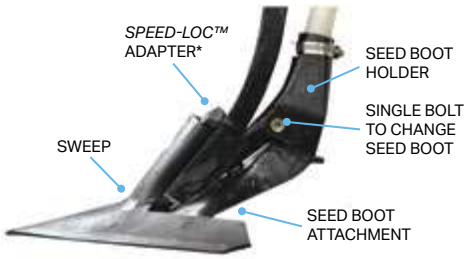

SEED BOOT **HOLDER**

300-HLD-4700

FITS: Bourgault & Ezee-On 47° shanks

OVERVIEW: 1-3/4" (45mm) bolt hole spacing. The bolt hole section is designed flat.

NOTES: Use a hose clamp to secure the air hose into the seed boot holder.

300-HLD-4710

FITS: 47° shanks except the Bourgault & Ezee-On

OVERVIEW: 1-3/4" (45mm) bolt hole spacing. The bolt hole section is curved.

NOTES: Use self tapping screw (911-SCR-1051) to secure the air hose into the seed boot holder.

300-HLD-5000

FITS: Bourgault chisel plow shanks, Morris LH755 shank on the Magnum III and Morris Concept 2000

OVERVIEW: 2-1/4" (57mm) bolt hole spacing. The bolt hole section is flat and has two sets of holes. The top set of holes should be used in almost all cases when mounting this holder to the shank.

NOTES: Use self tapping screw (911-SCR-1051) to secure the air hose into the seed boot holder.

300-HLD-5010

FITS: Any chisel plow shank except the Bourgault and the Morris LH755 shank

OVERVIEW: 2-1/4" (57mm) bolt hole spacing. The bolt hole section is curved.

NOTES: Use a hose clamp to secure the air hose into the seed boot holder.

NOTES:

- All holders on this page only accept 1-1/8" (29mm) O.D. hose.
- Bushing 300-BSH-1200 is required for 1-1/4" (32mm) O.D. hose. See page 114.
- A self-tapping screw 911-SCR-1051 should be used to hold the air hose or the bushing into the seed boot holder.
- A 3/8" (9mm) screw 911-SCR-1038 is also available to secure the air hose into the top of the bushing.

SEED BOOT **ATTACHMENTS**

300-BNC-4414

This bolt and nut secure the quick change seed boot attachments into the holders.

300-ATM-1000

Spreader attachment will distribute the seed evenly in a 3" to 4" (76-102mm) band. Seed spread may vary depending on sweep size, soil type and fan speed.

300-ATM-1006

Spreader attachment will distribute the seed evenly in a 6" (152mm) row. Seed spread may vary depending on sweep size, soil type and fan speed. **Works well for organic operations because of the wide seed spread.**

300-ATM-1010

Splitter attachment places the seed into two distinct rows approx. 6" (152mm) apart. Seed spread may vary depending on sweep size, soil type and fan speed.

300-ATM-1020

Straight attachment spreads the seed approx. 2-1/2" (63mm). It works well with the quick change spoons, spikes or any size of sweep.

SEED BOOT **ATTACHMENTS**

300-ATM-1031

Knife attachment places the seed in a very narrow band.

For use behind:
- 200-VRT-1000
- 410-VRT-1000
- 410-HLD-7500
- 410-KNF-0800
- 410-KNF-0801

300-ATM-1035

Knife attachment places the seed in a very narrow band.

For use behind:
- 200-KNF-0810
- 200-KNF-0811
- 200-KNF-0813
- 200-KNH-4000

300-ATM-1036

For use in Europe. Knife attachment places the seed in a band. **There is hard facing on the side.** Wider slot than the 300-ATM-1035.

For use behind 200-KNF-0813.

SEED BOOT **SQUARE TUBE**

300-SQR-1500

Slotted top hole to fit 1-3/4" to 2-1/4" (45-57mm) bolt spacing. Accepts 1-1/4" (32mm) O.D. air hose.

Designed to fit curved bottom shanks.

300-SQR-1505

Slotted top hole to fit 1-3/4" to 2-1/4" (45-57mm) bolt spacing. Accepts 1-1/4" (32mm) O.D. air hose.

Designed to fit flat bottom shanks.

Original Degelman
Wear Parts

Built by BTT for Degelman and available at BTT dealers!

Degelman Pro-Till *Niaux* 200 Disks

Notched concave disks provide a very aggressive cutting edge that is well suited for soil penetration. These disks are a good choice for residue management.

Concave disks do an excellent job of tilling and inverting the soil. The action of the disk depends on the speed. The biggest advantage this disk offers is durability and longevity.

MAX LIFE™ Harrow Tines

The *MAX LIFE* process weld infuses tungsten carbide onto the harrow tine creating the toughest and most economical option available.

Aftermarket *MAX LIFE* Harrow Tines last 6X longer than competitor tines and fit Degelman Heavy Harrows.

MAX LIFE™ Scrapers

MAX LIFE scrapers will significantly increase the life and performance of your roller scrapers.

The tungsten carbide tipped scrapers maintain their original length and shape, resulting in a clean roller and a more consistent field finish.

Degelman

SCRAPERS (PG 97) | HARROW TINES (PG 100) | DISKS (PG 104-105)

Fertilizer Knives

200-KNF-7521

FERTILIZER KNIFE

FITS: 200 Series *Speed-Loc™*

FERTILIZER TYPE:
Cold Flow NH3

TUBE SIZE:
1/2" (12mm) O.D.

TIP OPTIONS:
3/4" (19mm) welded tip with carbide which provides extra wear life and better penetration.

INSTALLATION DRIVER:
100-DRV-1010

OVERVIEW: The shorter tube length on this knife makes it better for cultivators and chisel plows. The welded tip is better for rocky conditions.

Can be converted to pressurized NH3 or liquid system.

Call for details.

200-KNF-7525

FERTILIZER KNIFE

FITS: 200 Series *Speed-Loc™*

FERTILIZER TYPE:
Cold Flow NH3

TUBE SIZE:
1/2" (12mm) O.D.

TIP OPTIONS:
3/4" (19mm) welded tip with carbide which provides extra wear life and better penetration.

INSTALLATION DRIVER:
100-DRV-1010

OVERVIEW: The longer tube length on this knife makes it better for air seeders and air drills that have seed boots on the back of the shank. **Not to be used with seed at the same time.** The welded tip is better for rocky conditions.

Can be converted to pressurized NH3 system.

Call for details.

200-KNF-7531

FERTILIZER KNIFE

FITS: 200 Series *Speed-Loc™*

FERTILIZER TYPE:
Hot Gas NH3

TUBE SIZE:
3/8" (9mm) O.D.

TIP OPTIONS:
3/4" (19mm) welded tip with carbide which provides extra wear life and better penetration.

INSTALLATION DRIVER:
100-DRV-1010

OVERVIEW: The shorter tube length on this knife makes it better for cultivators and chisel plows. The welded tip is better for rocky conditions.

Can be converted to pressurized NH3 or liquid system.

Call for details.

For guaranteed delivery of multi-shoot openers, place orders by January 31st.

Stabilize Your NH3 Hose

This stainless steel hose holder mounts on any C-shank to hold the NH3 hose in place and is completely height adjustable.

410-KNF-0825
410-KNF-0826

FERTILIZER KNIFE

FITS: 410 Series *Speed-Loc™*

FERTILIZER TYPE:
410-KNF-0825: Cold Flow NH3
410-KNF-0826: 1/4" (6mm) NH3 PSI or Liquid N

TUBE SIZE:
410-KNF-0825: 1/2" (12mm) O.D.
410-KNF-0826: 1/4" (6mm) O.D.

TIP OPTIONS:
3/4" (19mm) welded tip with carbide provides extra wear life and better penetration.

INSTALLATION DRIVER:
400-DRV-1010

OVERVIEW: Designed for heavy-duty use. The welded tip makes it better in rocky conditions.

410-KNF-0827

FERTILIZER KNIFE

FITS: 410 Series *Speed-Loc™*

FERTILIZER TYPE:
Cold Flow NH3

TUBE SIZE:
1/2" (12mm) O.D.
Pipe is also tapped with an 1/8" (3mm) NPT thread allowing for threaded inserts to accommodate pressurized NH3 or liquid fertilizer applications.

TIP OPTIONS:
3/4" (19mm) welded tip with carbide provides extra wear life and better penetration.

INSTALLATION DRIVER:
400-DRV-1010

OVERVIEW: Designed for heavy-duty use. The welded tip makes it better in rocky conditions.

410-KNF-0831

FERTILIZER KNIFE

FITS: 410 Series *Speed-Loc™*

FERTILIZER TYPE:
Hot Gas NH3

TUBE SIZE:
3/8" (9mm) O.D.

TIP OPTIONS:
3/4" (19mm) welded tip with carbide provides extra wear life and better penetration.

INSTALLATION DRIVER:
400-DRV-1010

OVERVIEW: Designed for heavy-duty use with Hot Gas NH3 kits. The welded tip makes it better in rocky conditions.

Can be converted to a Liquid system.
Call for details.

410-KNF-0835

FERTILIZER KNIFE

FITS: 410 Series *Speed-Loc™*

FERTILIZER TYPE:
Hot Gas NH3

TUBE SIZE:
3/8" (9mm) O.D.
capped with drilled cross holes.

TIP OPTIONS:
3/4" (19mm) welded tip with carbide provides extra wear life and better penetration.

INSTALLATION DRIVER:
400-DRV-1000

OVERVIEW: Designed for heavy-duty use with Hot Gas NH3 kits. The bottom of the NH3 pipe is capped with drilled cross holes. This delivers the NH3 into the sides of the fertilizer trench. The welded tip makes it better in rocky conditions. In addition, the longer tube prevents trash from damaging hose.

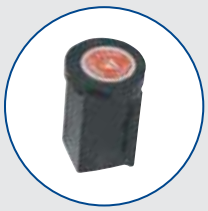

To ensure proper installation of *Speed-Loc™* products, use the appropriate driver listed with each product. For a chart of all drivers see page 80.

The Speed Release Tool 200-REL-1010 must be used when removing openers, sweeps and spikes from *Speed-Loc™* Adapters. See page 80.

410-KNF-7540

FERTILIZER KNIFE

FITS: 410 Series *Speed-Loc™*

FERTILIZER TYPE: Granular

TUBE SIZE: 1-1/4" (32mm) O.D. For different hose sizes a bushing may be used. See page 114.

TIP OPTIONS: 3/4" (19mm) welded tip with carbide provides extra wear life and better penetration.

INSTALLATION DRIVER: 400-DRV-1010

OVERVIEW: Designed for use with Granular fertilizer.

Not recommended for seeding.

410-KNF-7551
410-KNF-7553

FERTILIZER KNIFE

FITS: 410 Series *Speed-Loc™*

FERTILIZER TYPE: Granular + Cold Flow or Hot Gas NH3

TUBE SIZE:
Granular: 1-1/4" (32mm) O.D. For different hose sizes a bushing may be used. See page 114.

410-KNF-7551: Cold Flow NH3, 1/2" (12mm) O.D.

410-KNF-7553: Hot Gas NH3, 3/8" (9mm) O.D.

TIP OPTIONS: 3/4" (19mm) welded tip with nose carbide for long-lasting wear life and excellent penetration.

INSTALLATION DRIVER: 400-DRV-1010

OVERVIEW: Designed for use with Granular fertilizer and either Cold Flow or Hot Gas NH3 kits.

Not recommended for seeding.

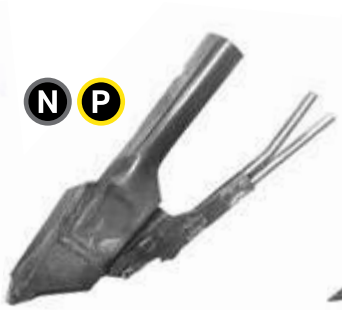

410-KNF-7560

FERTILIZER KNIFE

FITS: 410 Series *Speed-Loc™*

FERTILIZER TYPE: NH3 + Liquid Phos

TUBE SIZE: 0.400" stainless steel tube

TIP OPTIONS: 3/4" (19mm) welded tip with extra carbide for long lasting wear life and better penetration.

INSTALLATION DRIVER: 400-DRV-1010

OVERVIEW: Designed for use with Aqua NH3 and Liquid Phos. The welded tip is better in rocky conditions.

410-KNH-7524
410-KNH-7526*

FERTILIZER KNIFE

FITS: 410 Series *Speed-Loc™*

FERTILIZER TYPE: Cold Flow NH3 or NH3 PSI

TUBE SIZE:
410-KNH-7524: 1/2" (12mm) O.D. for use with Cold Flow Kits

410-KNH-7526: 1/4" (6mm) O.D. PSI

TIP OPTIONS: 3/4" (19mm) tips:
- 600-TIP-7500
- 600-TIP-7501
- 600-TIP-7502

Tips sold separately. See page 17.

INSTALLATION DRIVER: 400-DRV-1010

OVERVIEW: Designed for use with NH3 with the flexibility of using a replaceable tip, allowing you to choose the right tip for your conditions.

Can be converted to a pressurized NH3 or liquid system. Call for details.

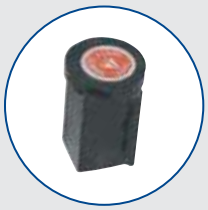

To ensure proper installation of *Speed-Loc™* products, use the appropriate driver listed with each product. For a chart of all drivers see page 80.

The Speed Release Tool 200-REL-1010 must be used when removing openers, sweeps and spikes from *Speed-Loc™* Adapters. See page 80.

200-KNH-4020

FERTILIZER KNIFE

FITS: 200 Series *Speed-Loc™*

FERTILIZER TYPE: Cold Flow NH3

TUBE SIZE: 1/2" (12mm) O.D.

TIP OPTIONS: Any Single Shoot Replaceable Tip, allowing you to choose the right tip for your conditions. **Tips sold separately.** See pages 12-13.

INSTALLATION DRIVER: Depends on tip used. See page 80.

OVERVIEW: This fertilizer knife is only recommended on light duty units with light trips.

Not recommended for rocky areas.

It is designed for use with Cold Flow NH3 kits.

Can be converted to a pressurized NH3 or liquid system. Call for details.

200-ASY-7523

FERTILIZER KNIFE

FITS: 200 Series *Speed-Loc™*

FERTILIZER TYPE: Non-Freeze NH3

TUBE SIZE: 1/2" (12mm) O.D.

TIP OPTIONS: 3/4" (19mm) welded tip with extra carbide for long lasting wear life and better penetration.

INSTALLATION DRIVER: 100-DRV-1010

OVERVIEW: NH3 is delivered through a nylon insert, insulating the knife from the NH3, preventing moist soil from freezing and building up on the knife, keeping it narrow to reduce disturbance with minimal gassing off.

Not suggested for rocky conditions.

410-ASY-0823

FERTILIZER KNIFE

FITS: 410 Series *Speed-Loc™*

FERTILIZER TYPE: Non-Freeze NH3

TUBE SIZE: 1/2" (12mm) O.D.

TIP OPTIONS: 3/4" (19mm) welded tip with extra carbide for long lasting wear life and better penetration.

INSTALLATION DRIVER: 400-DRV-1010

OVERVIEW: NH3 is delivered through a nylon insert, insulating the knife from the NH3, preventing moist soil from freezing and building up on the knife, keeping it narrow to reduce disturbance with minimal gassing off.

Not suggested for rocky conditions.

410-ASY-7523

FERTILIZER KNIFE

FITS: 410 Series *Speed-Loc™*

FERTILIZER TYPE: Non-Freeze NH3

TUBE SIZE: 1/2" (12mm) O.D.

TIP OPTIONS: 3/4" (19mm) tips:

- 600-TIP-7500
- 600-TIP-7501
- 600-TIP-7502

Tips sold separately. See page 17.

INSTALLATION DRIVER: 400-DRV-1010

OVERVIEW: NH3 is delivered through a nylon insert, insulating the knife from the NH3, preventing moist soil from freezing and building up on the knife, keeping it narrow to reduce disturbance with minimal gassing off.

Not suggested for rocky conditions.

For guaranteed delivery of multi-shoot openers, place orders by January 31st.

600-HHA-0750

Stabilize Your NH3 Hose

This stainless steel hose holder mounts on any C-shank to hold the NH3 hose in place and is completely height adjustable.

200-ASY-0001

Non-Freeze NH3 Rear Assembly

This replacement rear assembly works with all Non-Freeze NH3 *Speed-Loc* knives.

050-KNH-0820

FERTILIZER KNIFE

FITS: 47°, 50° C-shank

FERTILIZER TYPE: Cold Flow NH3

TUBE SIZE: 1/2" (12mm) O.D.

BOLT HOLE SPACING: 1-3/4" to 2-1/2" (44-64mm) slotted bolt hole spacing providing the ability to fit many different makes and models.

TIP OPTIONS: Any 200 Series Single Shoot Replaceable Tip, allowing you to choose the right tip for your conditions.

Tips sold separately. See pages 12-13.

OVERVIEW: This fertilizer knife is only recommended for use on light duty units with light trips. Not recommended for rocky areas.

NOTES: Installation bolts sold separately. Use 1/2" Grade 8 hex head bolts. See page 118.

Can be converted to a pressurized NH3 or liquid system.

Call for details.

599-KNH-7540

FERTILIZER KNIFE

FITS: 47° C-shank

FERTILIZER TYPE: Granular

TUBE SIZE: 1-1/4" (32mm) O.D. For different hose sizes a bushing may be used. See page 114.

BOLT HOLE SPACING: 1-3/4" (45mm)

TIP OPTIONS: 3/4" (19mm) tips:

- 600-TIP-7500
- 600-TIP-7501
- 600-TIP-7502

Tips sold separately. See page 17.

OVERVIEW: This fertilizer knife is designed to fit on the Bourgault Shank with 1-3/4" bolt hole centers with 47° shanks on air seeder units.

NOTES: Installation bolts sold separately. Use 1/2" Grade 8 hex head bolts. See page 118.

602-HLD-7500

FERTILIZER KNIFE

FITS: 43°, 47°, 50° C-shank

FERTILIZER TYPE: N/A

TUBE SIZE: N/A

BOLT HOLE SPACING: 1-3/4" to 2-1/2" (44-64mm) slotted bolt hole spacing providing the ability to fit many different makes and models.

TIP OPTIONS: 3/4" (19mm) tips:

- 600-TIP-7500
- 600-TIP-7501
- 600-TIP-7502

Tips sold separately. See page 17.

OVERVIEW: This knife uses replaceable tips. Choose the right tip for your conditions.

600-HLD-7500 regular use **602-HLD-7500** heavy duty use in tough conditions and high shank trip forces.

NOTES: Installation bolts sold separately. Use 1/2" Grade 8 hex head bolts. See page 118.

For 43° shank use a 7° wedge. See page 114.

602-KNH-7520

FERTILIZER KNIFE

FITS: 43°, 47°, 50° C-shank

FERTILIZER TYPE: Cold Flow NH3

TUBE SIZE: 1/2" (12mm) O.D.

BOLT HOLE SPACING: 1-3/4" to 2-1/2" (44-64mm) slotted bolt hole spacing providing the ability to fit many different makes and models.

TIP OPTIONS: 3/4" (19mm) tips:

- 600-TIP-7500
- 600-TIP-7501
- 600-TIP-7502

Tips sold separately. See page 17.

OVERVIEW: Designed for use with Cold Flow NH3 kits. The replaceable tip gives you the flexibility to choose the right tip for your conditions.

NOTES: Installation bolts sold separately. Use 1/2" Grade 8 hex head bolts. See page 118. **For 43° shank use a 7° wedge.** See page 114.

Can be converted to a pressurized NH3 or Liquid system.

Call for details.

602-ASY-7523

FERTILIZER KNIFE

FITS: 43°, 47°, 50° C-Shank

FERTILIZER TYPE: Non-Freeze NH3

TUBE SIZE: 1/2" (12mm) O.D.

BOLT HOLE SPACING: 1-3/4" to 2-1/2" (44-64mm) slotted bolt hole spacing providing the ability to fit many different makes and models.

TIP OPTIONS: 3/4" (19mm) tips:

- 600-TIP-7500
- 600-TIP-7501
- 600-TIP-7502

Tips sold separately. See page 17.

OVERVIEW: NH3 is delivered through a nylon insert, insulating the knife from the NH3, preventing moist soil from freezing and building up on the knife, keeping it narrow to reduce disturbance with minimal gassing off. **Not recommended for rocky conditions.**

NOTES: Installation bolts sold separately. Use 1/2" Grade 8 hex head bolts. See page 118.

For 43° shank use a 7° wedge. See page 114.

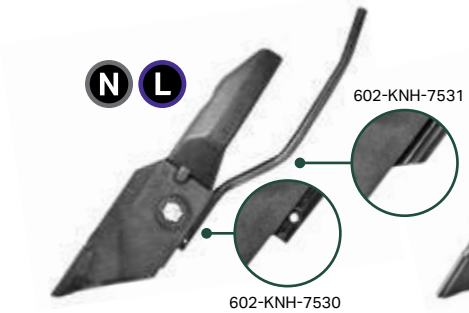

602-KNH-7530
602-KNH-7531

FERTILIZER KNIVES

FITS: 43°, 47°, 50° C-shank

FERTILIZER TYPE:
Hot Gas NH3, Liquid or Aqua NH3

TUBE SIZE:
600-KNH-7530 3/8" (9mm) O.D.
600-KNH-7531 0.400" stainless steel

BOLT HOLE SPACING:
1-3/4" to 2-1/2" (44-64mm) slotted bolt hole spacing providing the ability to fit many different makes and models.

TIP OPTIONS:
3/4" (19mm) tips:
- 600-TIP-7500
- 600-TIP-7501
- 600-TIP-7502

Tips sold separately.
See page 17.

OVERVIEW: Designed for use with the replaceable tip, giving you the flexibility to choose the right tip for your conditions.

NOTES: Installation bolts sold separately. Use 1/2" Grade 8 hex head bolts.
See page 118.

For 43° shank use a 7° wedge. See page 114.

602-KNH-7540

FERTILIZER KNIVES

FITS: 43°, 47°, 50° C-shank

FERTILIZER TYPE:
Granular

TUBE SIZE:
1-1/4" (32mm) O.D.

BOLT HOLE SPACING:
1-3/4" to 2-1/2" (44-64mm) slotted bolt hole spacing providing the ability to fit many different makes and models.

TIP OPTIONS:
3/4" (19mm) tips:
- 600-TIP-7500
- 600-TIP-7501
- 600-TIP-7502

Tips sold separately.
See page 17.

OVERVIEW: This knife uses replaceable tips. Choose the right tip for your conditions.

NOTES: Installation bolts sold separately. Use 1/2" Grade 8 hex head bolts.
See page 118.

For 43° shank use a 7° wedge. See page 114.

602-KNH-7552

FERTILIZER KNIVES

FITS: 43°, 47°, 50° C-shank

FERTILIZER TYPE:
Granular + Cold Flow NH3

TUBE SIZE:
Granular: 1-1/4" (32mm) O.D. For different hose sizes a bushing may be used. See page 114.
NH3: 1/2" (12mm)

BOLT HOLE SPACING:
1-3/4" to 2-1/2" (44-64mm) slotted bolt hole spacing providing the ability to fit many different makes and models.

TIP OPTIONS:
3/4" (19mm) tips:
- 600-TIP-7500
- 600-TIP-7501
- 600-TIP-7502

Tips sold separately.
See page 17.

OVERVIEW: Designed for use with Granular and Cold Flow NH3 kits. The replaceable tip gives you the flexibility to choose the right tip for your conditions.

NOTES: Installation bolts sold separately. Use 1/2" Grade 8 hex head bolts.
See page 118.

For 43° shank use a 7° wedge. See page 114.

Can be converted to a liquid system. Call for details.

602-KNH-7554

FERTILIZER KNIVES

FITS: 43°, 47°, 50° C-shank

FERTILIZER TYPE:
Granular + Cold Flow NH3

TUBE SIZE:
Granular: 1-1/4" (32mm) O.D. For different hose sizes a bushing may be used. See page 114.
NH3: 1/2" (12mm)

BOLT HOLE SPACING:
1-3/4" to 2-1/2" (44-64mm) slotted bolt hole spacing providing the ability to fit many different makes and models.

TIP OPTIONS:
3/4" (19mm) tips:
- 600-TIP-7500
- 600-TIP-7501
- 600-TIP-7502

Tips sold separately.
See page 17.

OVERVIEW: Designed for use with Granular and Cold Flow NH3 kits with the addition of an extra blow off NH3 hose. The replaceable tip gives you the flexibility to choose the right tip for your conditions. The 602 series is designed for heavy duty conditions.

NOTES: Installation bolts sold separately. Use 1/2" Grade 8 hex head bolts.
See page 118.

For 43° shank use a 7° wedge. See page 114.

All 600 HLD Holders are replaced with the 602 HLD Series (heavy duty).

602-KNH-7585

FERTILIZER KNIFE

FITS: Bourgault MRS

FERTILIZER TYPE:
Granular

TUBE SIZE:
1-3/4" (44mm) O.D.

BOLT HOLE SPACING:
1-3/4" to 2-1/4" (44-57mm) slotted bolt hole spacing.

TIP OPTIONS:
3/4" (19mm) tips:
- 600-TIP-7500
- 600-TIP-7501
- 600-TIP-7502

Tips sold separately.
See page 17.

OVERVIEW: This granular fertilizer knife is used with a replaceable tip, giving you the flexibility to choose the right tip for your conditions.

NOTES: Installation bolts sold separately. Use 1/2" Grade 8 hex head bolts.
See page 118.

602-KNH-7586

FERTILIZER KNIFE

FITS: Bourgault MRS

FERTILIZER TYPE:
Granular + Liquid or NH3

TUBE SIZE:
Granular: 1-3/4" (44mm) O.D.
Liquid NH3: 1/4" (6mm) O.D. Liquid or PSI

BOLT HOLE SPACING:
1-3/4" to 2-1/4" (44-57mm) slotted bolt hole spacing.

TIP OPTIONS:
3/4" (19mm) tips:
- 600-TIP-7500
- 600-TIP-7501
- 600-TIP-7502

Tips sold separately.
See page 17.

OVERVIEW: This liquid and granular fertilizer knife is used with a replaceable tip, giving you the flexibility to choose the right tip for your conditions.

NOTES: Installation bolts sold separately. Use 1/2" Grade 8 hex head bolts.
See page 118.

602-KNH-7587

FERTILIZER KNIFE

FITS: Bourgault MRS

FERTILIZER TYPE:
Granular + Cold Flow NH3

TUBE SIZE:
Granular: 1-1/4" to 1-3/4" (32-44mm) O.D.
NH3: 1/2" (12mm) O.D.

BOLT HOLE SPACING:
1-3/4" to 2-1/4" (44-57mm) slotted bolt hole spacing.

TIP OPTIONS:
3/4" (19mm) tips:
- 600-TIP-7500
- 600-TIP-7501
- 600-TIP-7502

Tips sold separately.
See page 17.

OVERVIEW: This NH3 and granular fertilizer knife is used with a replaceable tip, giving you the flexibility to choose the right tip for your conditions.

NOTES: Installation bolts sold separately. Use 1/2" Grade 8 hex head bolts.
See page 118.

602-KNH-7640

FERTILIZER KNIFE

FITS: 43°, 47°, 50° C-shank

FERTILIZER TYPE:
Granular

TUBE SIZE:
1-1/2" (38mm) O.D.

BOLT HOLE SPACING:
1-3/4" to 2-1/2" (44-64mm) slotted bolt hole spacing providing the ability to fit many different makes and models.

TIP OPTIONS:
3/4" (19mm) tips:
- 600-TIP-7500
- 600-TIP-7501
- 600-TIP-7502

Tips sold separately.
See page 17.

OVERVIEW: This knife uses replaceable tips. Choose the right tip for your conditions. For heavy duty use in tough conditions and high shank trip forces.

NOTES: Installation bolts sold separately. Use 1/2" Grade 8 hex head bolts.
See page 118.

For 43° shank use a 7° wedge. See page 114.

All 600 HLD Holders are replaced with the 602 HLD Series (heavy duty).

600-HHA-0750

Stabilize Your NH3 Hose

This stainless steel hose holder mounts on any C-shank to hold the NH3 hose in place and is completely height adjustable.

200-ASY-0001

Non-Freeze NH3 Rear Assembly

This replacement rear assembly works with all Non-Freeze NH3 *Speed-Loc* knives.

NEW!

G N G L

1/2" WIDE
050-MRA-5130

G N G L

1/2" WIDE
050-MRA-5231

050-MRA-5120 050-MRA-5130 050-MRA-5122 050-MRA-5131

FERTILIZER KNIFE

FITS: C-shank with 1-3/4" bolt spacing

FERTILIZER TYPE: Granular + NH3, Granular + Liquid

TUBE SIZE:
NH3: 1/2" (12mm) O.D.
Liquid: 1/4" (6mm) O.D. stainless steel
Granular: 1-3/4" (44mm) O.D.

BOLT HOLE SPACING:
1-3/4" (44mm) shank bolt hole spacing.
Torque dry 110 ft. lbs.

TIP OPTIONS: N/A

OVERVIEW: This 1/2" wide low disturbance fertilizer knife has double carbide on the nose as well as hard facing above the carbide and on the sides for longer wear.

050-MRA-5120 applies NH3.
050-MRA-5122 applies NH3.
050-MRA-5130 applies NH3 + Granular.
050-MRA-5131 applies Liquid + Granular.

For an expanded view of this opener see page 124.

Modular design allows you to replace worn parts instead of the entire opener.

050-MRA-5220 050-MRA-5230 050-MRA-5222 050-MRA-5231

FERTILIZER KNIFE

FITS: C-shank with 2-1/4" bolt spacing

FERTILIZER TYPE: Granular + NH3, Granular + Liquid

TUBE SIZE:
NH3: 1/2" (12mm) O.D.
Liquid: 1/4" (6mm) O.D. stainless steel
Granular: 1-3/4" (44mm) O.D.

BOLT HOLE SPACING: 2-1/4" (57mm) shank bolt hole spacing. Torque dry 110 ft. lbs.

TIP OPTIONS: N/A

OVERVIEW: This 1/2" wide low disturbance fertilizer knife has double carbide on the nose as well as hard facing above the carbide and on the sides for longer wear.

050-MRA-5220 applies NH3.
050-MRA-5222 applies NH3.
050-MRA-5230 applies NH3 + Granular.
050-MRA-5231 applies Liquid + Granular.

For an expanded view of this opener see page 124.

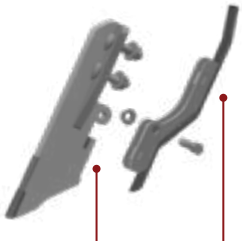

050-MRH-5175 + 050-MRF-0020
050-MRA-5120

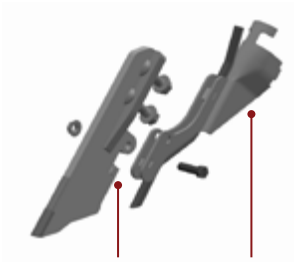

050-MRH-5175 + 050-MRF-0030
050-MRA-5130

050-MRH-5225 + 050-MRF-0020
050-MRA-5220

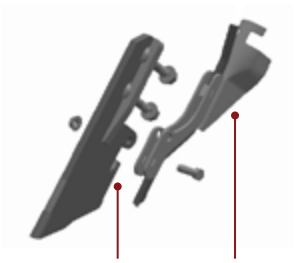

050-MRH-5225 + 050-MRF-0030
050-MRA-5230

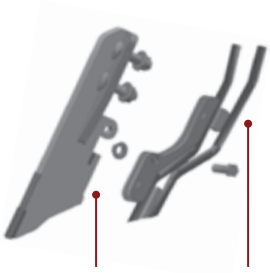

050-MRH-5175 + 050-MRF-0022
050-MRA-5122
DOUBLE NH3 TUBES FOR BLOW OFF

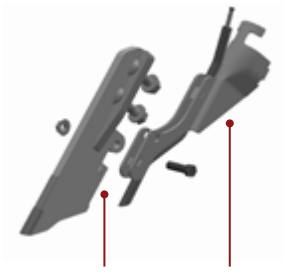

050-MRH-5175 + 050-MRF-0031
050-MRA-5131

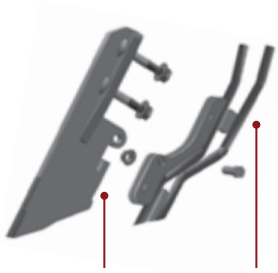

050-MRH-5225 + 050-MRF-0022
050-MRA-5222
DOUBLE NH3 TUBES FOR BLOW OFF

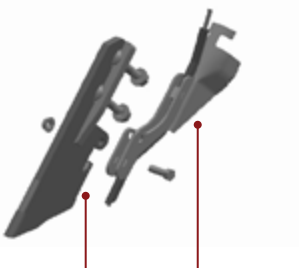

050-MRH-5225 + 050-MRF-0031
050-MRA-5231

670-ASY-7523
SHOWN WITH
600-TIP-7502

670-HLD-1000G
SHOWN WITH
600-TIP-7501

670-HLD-1000
670-HLD-1000G
670-HLD-1000GL
670-HLD-1000GN
670-HLD-1000N
670-HLD-1000L
670-ASY-7523

FERTILIZER KNIFE

FITS: 84° shanks and Salford Independent Series

FERTILIZER TYPES: Granular N, Granular N + NH3, Granular N + Liquid N, NH3, Liquid N

TUBE SIZE:
Granular: 1-1/2" (38mm) O.D.
NH3: 1/2" (12mm) O.D.
Liquid: 1/4" (6mm) O.D. stainless steel
Non-Freeze NH3: 1/2" (12mm) O.D.

TIP OPTIONS:
3/4" (19mm) tips:
- 600-TIP-7500
- 600-TIP-7501
- 600-TIP-7502

Tips sold separately. See page 17.

OVERVIEW: Body and fertilizer tubes are narrow with additional hard-surfacing on critical wear areas to increase the life of the holder. This opener features adjustment holes that allow you to adjust the height of the opener by 1.375" (35mm).

670-ASY-7523 NON-FREEZE VERSION: NH3 is delivered through a nylon insert, insulating the NH3 from the knife. This prevents the moist soil from freezing and building up on the knife, keeping it narrow to reduce disturbance with minimal gassing off. Designed to work with Cold Flow NH3 units.

674-ASY-7523
674-HLD-7520
674-HLD-7530

FERTILIZER KNIFE

FITS: Nitro-Master Edge On Shank

FERTILIZER TYPE: Non-Freeze NH3, Cold Flow NH3, Hot Gas NH3

TUBE SIZE:
NH3: 1/2" (12mm) O.D.
Hot Gas NH3 3/8" (9.5mm) O.D.

BOLT HOLE SPACING: 4-1/2" (115mm) bolt hole spacing as well as 1-3/4" to 2-1/2" (44-64mm) slotted bolt hole spacing providing the ability to fit many different makes and models.

TIP OPTIONS:
3/4" (19mm) tips:
- 600-TIP-7500
- 600-TIP-7501
- 600-TIP-7502

Tips sold separately. See page 17.

OVERVIEW: This knife uses 600 series replaceable tips. Choose the right tip for your conditions. For heavy duty use in tough conditions and high shank trip forces.

NOTES: Installation bolts sold separately. Use Grade 8 hex head bolts. See page 118.

200-ASY-0001

Non-Freeze NH3 Rear Assembly

This replacement rear assembly works with Non-Freeze NH3 *Speed-Loc* knives.

Speed-Loc™

200 Series Quick Change Adapters

See the *Speed-Loc™* adapter chart on pages 82-83.

200-QCA-4700

FITS: 47° Shanks, Bourgault & Ezee-On field cultivators, air seeders and air drills

BOLT HOLE SPACING: 1-3/4" (45mm) center to center

BOLTS: 1/2" (12mm) hex head bolts. See page 118.

200-QCA-4710

FITS: 47° Shanks (except Bourgault & Ezee-On)

BOLT HOLE SPACING: 1-3/4" (45mm) center to center.

BOLTS: 7/16" (11mm) shank holes use oversized head plow bolts. See page 118.

1/2" (12mm) shank holes use regular plow bolts.

200-QCA-5000

FITS: 50° Shanks, Morris Concept 2000 & Bourgault

BOLT HOLE SPACING: 2-1/4" (57mm) center to center.

BOLTS: 1/2" (12mm) hex head bolts. See page 118.

NOTES: **Use for seeding only. Not recommended for primary tillage.**

200-QCA-5010

FITS: 43° & 50° Shanks (except Bourgault Chisel Plows)

BOLT HOLE SPACING: 2-1/4" (57mm) center to center.

BOLTS: 1/2" (12mm) plow bolts.

NOTES: **Not recommended for deep, heavy tillage.**

For 43° shank use a 7° wedge. See page 114.

200-QCA-5020

FITS: European built shanks

BOLT HOLE SPACING: 63-80mm center to center.

BOLTS: M12-Din608 10.9 plow bolts.

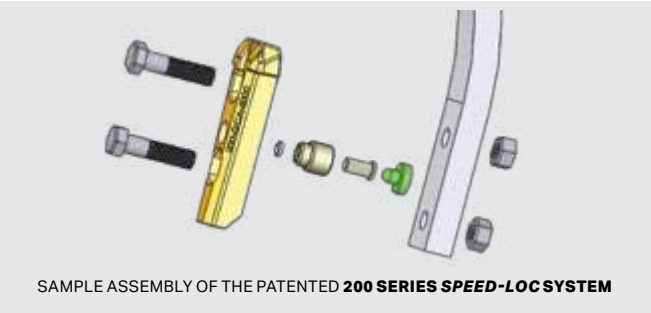

SAMPLE ASSEMBLY OF THE PATENTED **200 SERIES *SPEED-LOC* SYSTEM**

200-QCA-5030

FITS: Horsch shanks

BOLT HOLE SPACING: 2-1/4" (57mm) center to center.

BOLTS: M12-Din608 10.9 plow bolts.

Don't forget the Speed Release Tool!

The Speed Release Tool 200-REL-1010 must be used when removing openers, sweeps and spikes from the *Speed-Loc* Adapters. See page 80.

Not sure which adapter or bolts you need? See the *Speed-Loc* adapter chart on pages 82-83. For a complete list of bolt lengths, see page 118.

410 Series Quick Change Adapters

Speed Release Tool 200-REL-1010 must be used to remove product from all *Speed-Loc* adapters.

410-QCA-5000

FITS: 50° Shanks on Bourgault chisel plows and Morris Concept 2000 with 755lb trip.

BOLT HOLE SPACING: 2-1/4" (57mm) center to center.

BOLTS: 1/2" (12mm) hex head bolts. See page 119.

NOTES: On a Bourgault four-hole shank, the center hole of the adapter should be plugged to protect the spring ball from NH3 gases when used as a NH3 applicator.

When installing 410 Series *Speed-Loc* Adapters for use with NH3, fill the hole behind the spring ball with plumber's putty to protect from degradation caused by NH3.

410-QCA-5010

FITS: 43° & 50° Shanks on all chisel plows except Bourgault, Morris Concept 2000 with 755lb trip, and some John Deere models.

BOLT HOLE SPACING: 1-3/4" to 3" (45-76mm) center to center slotted bolt hole spacing providing the ability to fit many different makes and models.

BOLTS: 1/2" (12mm) hex head bolts. See page 119.

NOTES: In rocky or abrasive conditions, the bottom nut may experience excessive wear or damage. This problem is alleviated by placing the bottom bolt in from the back of the shank and putting the nut inside the slot in front of the adapter.

For 43° shank use a 7° wedge. See page 114.

410-QCA-5020

FITS: Lemken shanks

BOLT HOLE SPACING: 1-3/4" (45mm) center to center.

BOLTS: M12-DIN 608 10.9 plow bolts.

410-QCA-5060

FITS: Köckerling

BOLT HOLE SPACING: N/A

BOLTS: M12-DIN 608 12.9 plow bolts.

410-QCA-5080

FITS: 50° Shanks on some older and current model John Deere 2410 and 2430 chisel plows, and Summers Superchisel.

BOLT HOLE SPACING: 2-1/4" (57mm) center to center.

BOLTS: For John Deere 1-1/4" shank use 1/2" x 3" Grade 8 hex head bolt prevailing torque lock nuts.

NOTES: Use bushing 880-BSH-2000 for installation on all John Deere shanks that have a split bottom bolt hole, and for Summers chisel plows. See page 114.

For 43° shank use a 7° wedge. See page 119.

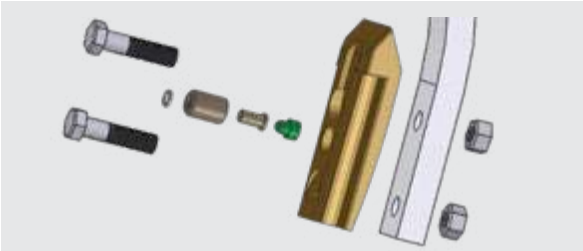

SAMPLE ASSEMBLY OF THE PATENTED **410 SERIES *SPEED-LOC* SYSTEM**

Speed-Loc™ Accessories & Replacement Parts

Speed Release Tool 200-REL-1010 must be used to remove product from all *Speed-Loc* adapters.

200-SLC-1001

Replacement bushing for all 200 Series adapters. Comes complete with dust seal.

200-SLC-1010

Replacement dust seal for all 200 & 410 Series adapters.

200-SLC-1020

Replacement locking pin for all 200 & 410 Series adapters purchased after Nov 1, 2008.

200-SLC-1030

Replacement spring ball for 200-QCA-4700 adapters.

200-SLC-1035

Replacement spring ball for 200-QCA-4710, 200-QCA-5000, 200-QCA-5010 adapters.

200-SLC-1037

Replacement spring ball for 200-QCA-5020 adapters.

200-SLC-1038

Replacement spring ball for 200-QCA-5020 adapters. For use in special applications.

200-SLC-1039

Replacement spring ball for 200-QCA-5030 adapters.

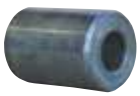

410-SLC-1001

Replacement bushing for 410-QCA-5000, 410-QCA-5010, 410-QCA-5020 adapters. Comes complete with dust seal.

410-SLC-1022

Replacement locking pin for all 410 Series adapters purchased prior to Nov 1, 2008. **If 410 Series adapter was purchased after Nov 1, 2008 use 200-SLC-1020.**

410-SLC-1030

Replacement spring ball for 410-QCA-5000, 410-QCA-5010, 410-QCA-5020 adapters.

410-SLC-1050

Replacement package for 410 Series adapters. Includes pin, bushing, spring ball, dust seal.

100-HAM-4000

This 4lb (1.8kg) hammer is ideal for installing all quick change products.

200-REL-1010

The speed release tool must be used to remove 200 and 410 Series sweeps and openers off *Speed-Loc* adapters.

Speed-Loc™ Drivers

Choose the correct driver to install *Speed-Loc* products.

PART #	100-DRV-1010	100-DRV-1020	200-DRV-1013	200-DRV-1030	400-DRV-1000	400-DRV-1010
200-ASY-7523	■					
200-HOE-1700		■				
200-KNF-0800, 0801, 0810, 0811, 0813, 7560						■
200-KNF-0863, 7501, 7510, 7511, 7512, 7521, 7525, 7531, 7542	■					
200-KNH-7551						■
200-TIP-0511, 0801, 0802, 0803, 0811 when used on 200-KNH-4000, 4010 OR 4020						■
200-TIP-1011				■		
200-TIP-2011, 3000, 3001, 3011, 4011 when used on 200-KNH-4000, 4010 OR 4020			■			
200-VRT-1040				■		
410-ASY-0823, 7523						■
410-KNF-0801, 0825, 0826, 0831, 7551, 7553, 7560						■
410-KNH-7524, 7526, 7540						■
SWEEPS & SPOONS					■	

100-DRV-1010

100-DRV-1020

200-DRV-1013

200-DRV-1030

400-DRV-1000

400-DRV-1010

Speed-Loc™ Installation & Removal

Scan the QR codes with your smart phone camera to watch the how-to videos.

Preparation

Before installing a new set of seeding openers, fertilizer knives, sweeps or spikes on new or existing adapters, ensure that you visually inspect each adapter for the following signs of damage:

- broken, damaged or missing locking pin
- completely depressed locking pin that will not retract back out (damaged spring ball)
- loose bolts, cracks and other signs of wear

SCAN WITH SMART PHONE CAMERA

Scan the QR code on the right with your smart phone camera to watch the video on how to replace a ball spring on *Speed-Loc* Quick Change adapters.

Installation

When installing any product always use safety glasses and specified driver. See page 80.

1. Firmly install product by sliding it onto the adapter by hand, over the locking pin, until it will no longer travel on the adapter.
2. Place the appropriate driver over the product being installed to prevent damage to the nose or leading edge. With a 4lb. (1.8 kg) hammer, strike the driver with the hammer several times driving the product upward onto the adapter until it contacts the top stopper.
3. Product being driven on should be over the locking pin and snapped or locked into place in the hole of the product being driven on. Pin should be visible through the hole. **Product must be driven all the way on!** Putting the product on part way and going into the field will NOT place the product onto the adapter.
4. Verify the pin has sprung into place of the hole in the product. **Failure to do so will cause loss of product.**
5. After a few hundred acres of work, check adapters. If they are loose on the shank re-torque the bolts.

SCAN WITH SMART PHONE CAMERA

New product may move slightly on the adapters. This is normal wear. If you notice any damage to the product or pin, replace damaged parts and return damaged parts to dealer. If product installs very hard and will not drive over the locking pin, do not use the product. Return it to dealer for replacement and warranty.

Scan the QR code above with your smart phone camera to watch the video on how to install products onto *Speed-Loc* Quick Change adapters.

Removal

When removing the product always use safety glasses and Speed-Release Tool (200-REL-1010). See page 80.

1. Strike the product sharply with a hammer on both sides of the product to loosen the rust and dirt between the adapter and product.
2. Place the hook of the release tool on top of the product stem; pressing down on the handle to depress the locking pin.
3. While depressing the locking pin strike the top driving plate of the release tool with a hammer to move the product downward to clear the pin on the adapter and STOP. Driving the release tool beyond the pin will result in damaging the release tool, locking pin and spring ball.
4. Remove the release tool; strike the top of the stem to remove the product the remainder of the way off the adapter body.
5. Clean and inspect the adapter and locking pin for damage. Follow installation instructions for reinstalling products.

SCAN WITH SMART PHONE CAMERA

Scan the QR code on the right with your smart phone camera to watch the video on how to remove products from *Speed-Loc* Quick Change adapters.

Speed-Loc™ Adapter Chart

For North America & Australia

MAKE & MODEL	SHANK DEGREE	BOLT SIZE	HOLE CENTER	200 SERIES					410 SERIES				
				200-QCA-4700	200-QCA-4710	200-QCA-5000	200-QCA-5010	100-WDG-0700	410-QCA-5000	410-QCA-5010	410-QCA-5080	400-WDG-0300	400-WDG-0700
AFM													
180, 200, 250, 880	43°	7/16	1-3/4		■		[1]■						
150, 2300, 310, 300	50°	1/2	2-1/4				■			■			
350 SCARICHISEL	50°	1/2	2-1/4				■			■			
ANDERSON													
FIELD CULTIVATORS	47°	3/8	1-3/4		■								
CHISEL PLOWS	50°	1/2	2-1/4				■			■			
BOURGAULT													
FIELD CULTIVATORS 6200, 6800, 8800, 8810, 8910	47°	1/2	1-3/4	■									
SPS 270, 360	50°	1/2	2-1/4						■				
5710, 5810 AIR DRILL	47°	1/2	1-3/4	■									
CHISEL PLOWS 9200, 9400, 9500, 9800	50°	1/2	2-1/4			■			■				
BRADY													
FIELD CULTIVATORS	43°	3/8	1-5/8	(NO ADAPTER FOR THIS APPLICATION)									
CHISEL PLOWS	50°	7/16	2-1/4				■			■			
BRILLION													
HFCT MO	47°	7/16	1-5/8	■									
BUSH HOG													
FIELD CULTIVATORS	47°	3/8	1-3/4		■								
CHISEL PLOWS	50°	7/16	2-1/4				■			■			
CASE													
FC, FCW, FCM, 10, 50, 55, 645	47°	3/8	1-3/4		■								
4700, 4900, 5000, 645	43°	1/2	2-1/4				■	■		■			■
CASE IH													
255 TIGER-MATE II	47°	7/16	1-3/4		■								
45, 4300, 4500, 4600, 4700, 4800, 4900	47°	7/16	1-3/4		■								
VIBRASHANK	47°	7/16	1-3/4		■								
VIBRACHISEL 5600, 5700	43°	1/2	2-1/4				■	■		■			■
5800, 5850, 5900	50°	1/2	2-1/4				■			■			
PTX 300, PTX 600	50°	1/2	2-1/4				■			■			
ATX 400, 700 AIR HOE DRILL 350 LB OR 550 LB TRIP	50°	1/2	2-1/4				■						
CONCORD													
C-SHANKS	50°	1/2	2-1/4				■			■			
EDGE-ON SHANKS				(NO ADAPTER FOR THIS APPLICATION)									
CCIL													
202, 179, 279, 379	47°	3/8	1-3/4		■								
203, 204, 205	43°	1/2	2-1/2							■			■
806, 807, 808	43°	1/2	2-1/2							■			■
CHISEL PLOW (THICK SHANK)	50°	7/16	2-1/4				■			■			
CNH (DMI)													
FIELD CULTIVATORS	47°	7/16	1-3/4		■								
DEGELMAN													
FIELD CULTIVATORS	47°	7/16	1-3/4		■								
500	50°	7/16	2-1/4				■			■			
3000-2	50°	7/16	2-1/4				■			■			
DEMSTER													
CHISEL PLOWS	54°	7/16	2-1/4	(NO ADAPTER FOR THIS APPLICATION)									
EDWARDS													
CHISEL PLOWS	50°	7/16	2-1/4				■			■			
FORWARD													
BOURGAULT TYNE													
280, 2700, 2800, 8800	47°	1/2	1-3/4	■									
FUSION DELTA	47°	1/2	1-3/4		■								
3000 & 400 SERIES C/P	50°	1/2	2-1/4				■			■			
EZEE-ON													
FIELD CULTIVATORS 3500, 3550, 5550	47°	1/2	1-3/4	■									

MAKE & MODEL	SHANK DEGREE	BOLT SIZE	HOLE CENTER	200 SERIES					410 SERIES				
				200-QCA-4700	200-QCA-4710	200-QCA-5000	200-QCA-5010	100-WDG-0700	410-QCA-5000	410-QCA-5010	410-QCA-5080	400-WDG-0300	400-WDG-0700
6000 WITH FIELD CULTIVATOR SHANK OPTION	47°	1/2	1-3/4	■									
6000 WITH CHISEL PLOW SHANK OPTION	50°	1/2	2-1/4				■			■			
ALL CHISEL PLOWS INCLUDING 7450	50°	1/2	2-1/4				■			■			
7560, 7550	47°	1/2	1-3/4	■									
FLEXI-COIL													
200, 400, 800	47°	7/16	1-3/4		■								
300, 340, 600	50°	1/2	2-1/4				■			■			
820 & ST820 WITH 350 LB & 550 LB TRIPS	47°	1/2	1-3/4		■								
820 & ST820 WITH 550 LB & 650 LB TRIPS	50°	1/2	2-1/4				■			■			
5000 & 7500 DEPENDING ON SHANK OPTION	47°	1/2	1-3/4		■								
5000 & 7500 DEPENDING ON SHANK OPTION	50°	1/2	2-1/4				■			■			
5000HD & 5500 AIR HOE DRILL 350 LB OR 550 LB TRIP	50°	1/2	2-1/4				■						
FRIGGSTAD													
FIELD CULTIVATORS	47°	7/16	1-3/4		■								
CHISEL PLOWS (OLDER MODELS)	50°	7/16	2-1/4				■			■			
CHISEL PLOWS	50°	1/2	2-1/4				■			■			
GASON													
5100 SERIES	46°	7/16	1-3/4	■									
SCARITILL & EH SCARITILL	47°	1/2	BOTH		■								
7100 ECOTILL	50°	1/2	2-1/4				■			■			
GESSNER													
HR 1200	50°	1/2	2-1/4				■			■			
GLENCOE													
PC, MPC, PCMW	47°	3/8	1-3/4		■								
CHISEL PLOWS	47°	7/16	2-1/4				■			■		■	
HIGH CLEARANCE	50°	7/16	1-2/4				■			■			
GRAHAM													
CHISEL PLOWS	50°	1/2	2-1/4				■			■			
400, 500, 1600, 2600	54°	7/16	2-1/4	(NO ADAPTER FOR THIS APPLICATION)									
GREAT PLAINS													
8000, 7000	47°	7/16	1-3/4		■								
GYRAL IMPLEMENTS													
PENETRATOR T23, T25	43°	1/2	BOTH				■	■		■			■
AG BNOSS T30	43°	7/16	BOTH				■	■		■			■
GYSLER													
CHISEL PLOWS	47°	7/16	2-1/4				■			■		■	
HESSTON													
FIELD CULTIVATORS	47°	1/2	1-3/4		■								
CHISEL PLOWS	50°	1/2	2-1/4				■			■			
HINIKER													
FIELD CULTIVATORS	47°	7/16	1-3/4		■								
CHISEL PLOWS	50°	1/2	2-1/4				■			■			
HORWOOD BAGSHAW													
350 SCARIBAR EDGE-ON	47°	1/2	1-3/4	■									
HORWARD													
CHISEL PLOWS[2]	50°	9/16	2-1/4				■			■			
INTERNATIONAL													
45, 46, 47	47°	7/16	1-3/4		■								
10, 50, 55, 75, 509, 645	43°	1/2	2-1/4							■			■
JANKE													
UNIV DIRECT DRILL	50°	1/2	2-1/4				■			■			
U/D DRILL (HYD) EARLY	50°	1/2	2-1/4				■			■			

NOTES: 200 Series adapters should not be used on a chisel plow or heavy duty cultivator unless being used for seeding. [1]Sweeps will not work with this combination, for knife openers only. [2]Bolt sizes will require adapting.

MAKE & MODEL	SHANK DEGREE	BOLT SIZE	HOLE CENTER	200 SERIES					410 SERIES				
				200-QCA-4700	200-QCA-4710	200-QCA-5000	200-QCA-5010	100-WDG-0700	410-QCA-5000	410-QCA-5010	410-QCA-5080	400-WDG-0300	400-WDG-0700
JEOFFROY													
450	47°	3/8	1-3/4		■								
JOHN DEERE[3]													
1000, 1010, 1050	43°	3/8	1-5/8	(NO ADAPTER FOR THIS APPLICATION)									
726, 2200, 2210, 2230	47°	7/16	1-3/4		■								
940, 960, 985	47°	7/16	1-3/4		■								
730	47°	7/16	1-3/4		■								
735, 737, 610, 655, 680, 685, 1600, 1610, 1650	50°	1/2[5]	2-1/4				[4]■			[5]■	[6]■		
1810, 1820, 1830, 1835 WITH 350 LB TRIPS	47°	1/2	1-3/4		■								
1810, 1820, 1830, 1835, H500, H500F WITH 500 LB TRIPS	50°	1/2[5]	2-1/4				■			[5]■	[6]■		
2400, 2410, 2430	50°	1/2[5]	2-1/4				■			[5]■	[6]■		
JOHN SHEARER													
UNIVERSAL CULTIVATOR	47°	7/16	1-3/4		■								
CHISEL PLOWS	50°	1/2	2-1/4				■			■			
KONGSKILDE													
C-SHANK	47°	1/2	1-3/4		■								
S-TINE	47°	7/16	1-5/8		■								
KRAUSE													
600, 900, 3100, 4200	47°	7/16	1-3/4		■								
4000	50°	1/2	2-1/4				■			■			
5630, 5635	47°	1/2	1-3/4		■								
LEON													
CP77	43°	7/16	2-1/4				■	■		■			■
ALL OTHER LEON CHISEL PLOWS	50°	1/2	2-1/4				■			■			
FIELD CULTIVATORS	47°	7/16	1-3/4		■								
MASSEY FERGUSON													
160	47°	3/8	1-3/4		■								
259	47°	7/16	1-3/4		■								
124, 125, 126, 128, 133	54°	7/16	2-1/4	(NO ADAPTER FOR THIS APPLICATION)									
MF 7300 CHISEL PLOW	50°	1/2	2-1/4				■			■			
MORRIS													
L225, L233, L240, L320	47°	3/8	1-3/4		■								
CHALLENGER II, 9000, 9100	47°	1/2	1-3/4		■								
MAXIM, MAXIM II	47°	1/2	1-3/4		■								
MAXIM III	47°	1/2	1-3/4		■								
CONCEPT 2000 WITH 400 LB TRIP	47°	1/2	1-3/4		■								
CONCEPT 2000 WITH 550 LB TRIP	47°	1/2	1-3/4		■								
CONCEPT 2000 WITH LH 755 LB TRIP	50°	1/2	2-1/4				■		■				
220, 4, 5, 6, 7	43°	7/16	2-1/4				■	■		■			■
MAGNUM I	43°	1/2	2-1/4				■	■		■			■
912, 8900, 9000, MAGNUM II	50°	1/2	2-1/4				■			■			
MAGNUM III WITH LH 755 LB TRIP	50°	1/2	2-1/4				■			■			
CHALLENGER L2 480	47°	3/8	1-3/4		■								
NEW HOLLAND													
SD 440A, SD 550A AIR HOE DRILL (DEPENDING ON SHANK OPTION)	47°	1/2	1-3/4		■								
SD 440A, SD 550A AIR HOE DRILL (DEPENDING ON SHANK OPTION)	50°	1/2	2-1/4				■			■			
ST 540 CHISEL PLOW	50°	1/2	2-1/4				■			■			
ST 250	47°	1/2	1-3/4		■								
ST 830 WITH 350 LB TRIP	47°	1/2	1-3/4		■								

MAKE & MODEL	SHANK DEGREE	BOLT SIZE	HOLE CENTER	200 SERIES					410 SERIES				
				200-QCA-4700	200-QCA-4710	200-QCA-5000	200-QCA-5010	100-WDG-0700	410-QCA-5000	410-QCA-5010	410-QCA-5080	400-WDG-0300	400-WDG-0700
ST 830 WITH 550 LB TRIP (DEPENDING ON SHANK OPTION)	47°	1/2	1-3/4		■								
ST 830 WITH 550 LB TRIP (DEPENDING ON SHANK OPTION)	50°	1/2	2-1/4				■			■			
ST 830 WITH 650 LB TRIP	50°	1/2	2-1/4				■			■			
P2050, P2060 AIR HOE DRILL 350 LB OR 550 LB TRIP	50°	1/2	2-1/4				■						
NOBLE													
XR20	50°	7/16	2-1/4				■			■			
8000, 4000 MULTI-TOOL	50°	1/2	2-1/4				■			■			
QUINSTAR													
FIELD FINISHER	47°	7/16	1-3/4		■								
FALLOW MASTER III	50°	1/2	2-1/4				■			■			
RYAN (RFM)													
1000 SERIES	47°	7/16	1-3/4		■								
SALFORD													
FIELD CULTIVATOR	47°	7/16	1-3/4		■								
SCHULTE													
1000 SERIES	50°	7/16	2-1/4				■			■			
SMALE													
MULTIVATOR	47°	7/16	1-3/4		■								
CHISEL PLOWS	50°	1/2	2-1/4				■			■			
SUMMERS													
SUPERCHISEL	50°	1/2	2-1/4								■		
SUNFLOWER													
CHISEL PLOWS	50°	1/2	2-1/4				■			■			
5000, 6000, 7000	47°	7/16	1-3/4		■								
TAYLOR													
FIELD CULTIVATORS	47°	3/8	1-3/4		■								
UNVERFERTH													
PERFECTA II FIELD CULTIVATORS	47°	7/16	1-3/4		■								
VERSATILE													
DH730, DH750 WITH 350 LB & 550 LB TRIPS	47°	1/2	1-3/4	■									
C500 WITH 350 LB & 550 LB TRIPS	47°	1/2	1-3/4	■									
C600 WITH 350 LB & 550 LB TRIPS	47°	1/2	1-3/4	■									
C600 WITH 600 LB TRIP	50°	1/2	2-1/4				■			■			
C700 WITH 650 LB TRIP	50°	1/2	2-1/4				■			■			
VICTORY													
CHISEL PLOWS	50°	1/2	2-1/4				■			■			
WIL-RICH													
FIELD CULTIVATORS	47°	7/16	1-3/4		■								
CHISEL PLOWS (1993 & OLDER)	43°	7/16	2-1/4				■	■		■			■
CHISEL PLOWS (1994 & NEWER)	50°	1/2	2-1/4				■			■			
XL2, QX2	47°	7/16	1-3/4		■								
YEOMANS GRAHAM HOEMES													
US CHISEL PLOWS	50°	1/2	2-1/4				■			■			

NOTES: [3]880-BSH-2000 should be used with all split John Deere shanks. [4]Use wedge 880-WDG-0300 to correct pitch. [5]Shanks that are mounted with a vertical bolt (28" standard). [6]Shanks that are mounted with a horizontal bolt (32" standard).

BLUE ARMOUR

Sweeps & Chisels

24-30%

LONGER WEAR

- INCREASED DURABILITY
- REDUCED STEM WEAR
- BETTER VALUE

Blue Armour is available in select Bolt-On, 200 & 410 Series *Speed-Loc™* Quick Change sweeps and spoons. Not available in products with a welded wear pad.

LOOK FOR THE BLUE ARMOUR SHIELD!

"

We are pleased with the performance of our Blue Armour Sweeps. **We were hoping for 30% more usable life than the competitor's sweep but we are getting closer to 50%.**

The wear pattern is better because Blue Armour retains the leading tip of the sweep much longer. This keeps us at a more consistent depth.

Ryan Tucker, North Dakota, USA

Tillage

200 Series *Speed-Loc™*

Blue Armour options available. Look for the blue shield!

4" (200-PWV-0400)

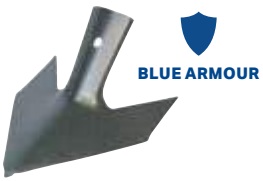

7" (200-PWV-0700)

10" (200-PWV-1000)

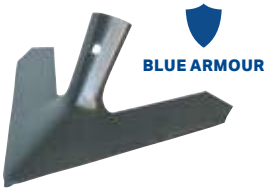

12" (200-PWV-1208)

14" (200-PWV-1408)

SIZE	THICKNESS	PRODUCT NO.
4" (100mm)	1/4"(6mm)	**200-PWV-0400**
5" (140mm)	1/4" (6mm)	**200-PWV-0500**
5" (140mm)	5/16" (8mm)	**200-PWV-0508**
7" (180mm)	1/4" (6mm)	**200-PWV-0700**
7" (180mm)	5/16" (8mm)	**200-PWV-0708**
9" (230mm)	1/4" (6mm)	**200-PWV-0900**
9" (230mm)	5/16" (8mm)	**200-PWV-0908**
10" (254mm)	1/4" (6mm)	**200-PWV-1000**
10" (254mm)	5/16" (8mm)	**200-PWV-1008**
11" (280mm)	1/4" (6mm)	**200-PWV-1100**
11" (280mm)	5/16" (8mm)	**200-PWV-1108**
12" (305mm)	1/4" (6mm)	**200-PWV-1200**
12" (305mm)	5/16" (8mm)	**200-PWV-1208**
13" (330mm)	1/4" (6mm)	**200-PWV-1300**
13" (330mm)	5/16" (8mm)	**200-PWV-1308**
14" (355mm)	1/4" (6mm)	**200-PWV-1400**
14" (355mm)	5/16" (8mm)	**200-PWV-1408**
16" (406mm)	5/16" (8mm)	**200-PWV-1608***
18" (457mm)	5/16" (8mm)	**200-PWV-1808***

*THESE SWEEPS ARE ONLY AVAILABLE IN 5/16" (8MM) THICKNESS AND WERE DEVELOPED FOR WESTERN EUROPE. IT IS NOT RECOMMENDED FOR MOST NORTH AMERICAN FIELD CONDITIONS.

5" (200-PWV-0500)

9" (200-PWV-0908)

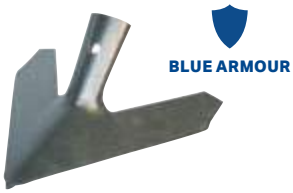

11" (200-PWV-1108)

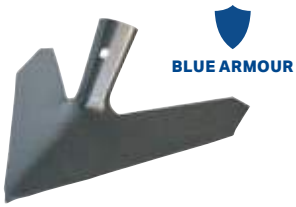

13" (200-PWV-1308)

16" (200-PWV-1608)

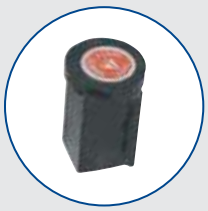

To ensure proper installation of *Speed-Loc™* products, use the appropriate driver listed with each product. For a chart of all drivers see page 80.

The Speed Release Tool 200-REL-1010 must be used when removing openers, sweeps and spikes from *Speed-Loc™* Adapters. See page 80.

200-GFO-0308

GOOSEFOOT

This "Goosefoot" tillage tool is 5/16" (8mm) thick and 2-1/2" (63mm) wide.

Designed specifically for vibrating s-tine cultivators.

200-PWV-0405

SWEEP W/ HARDENED WEAR PAD

This sweep is 1/4" (6mm) thick and 4" (100mm) wide with a 3/8" hardened wear pad (52-56 HRC). The nose runs 1/2" (12mm) lower than the other 200 Series sweeps. This increased pitch improves penetration in hard or compacted ground. Ideal for fall tillage or deep working.

200-PWV-0405ML

MAX LIFE™ SWEEP W/ HARDENED WEAR PAD

This sweep is 1/4" (6mm) thick and 4" (100mm) wide with a 3/8" hardened wear pad (52-56 HRC). Heat applied, embedded carbide on the underside. The nose runs 1/2" (12mm) lower than the other 200 Series sweeps. This increased pitch improves penetration in hard or compacted ground. Ideal for fall tillage or deep working.

200-PWV-0428
200-PWV-0528

SWEEP W/ HARDENED WEAR PAD

These sweeps are 5/16" (8mm) thick with a 3/8" x 2" hardened wear pad (52-56 HRC) which increases the life expectancy.

200-PWV-0428 is 4" (100mm) wide.

200-PWV-0528 is 5" (127mm) wide.

Designed mainly for fall tillage or deep working.

200-PWV-0928

SWEEP W/ HARDENED WEAR PAD

This sweep is 5/16" (8mm) thick and 9" (230mm) wide. It has a 3/8" x 2" hardened wear pad (52-56 HRC) that extends up the entire stem which increases its life expectancy.

200-SPK-0200

SPIKE

This spike is 5/8" (15mm) thick, 2-1/4" (57mm) wide and 6" (150mm) long. It has a hardened wear pad (52-56 HRC) for extra life. This tool is ideal for primary tillage or banding fertilizer.

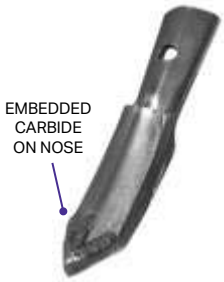

200-SPK-0200ML

MAX LIFE™ SPIKE

This spike is 5/8" (15mm) thick, 2-1/4" (57mm) wide and 6" (150mm) long. It has a hardened wear pad (52-56 HRC) for extra life. Heat applied, embedded carbide has been added to the nose. Ideal for primary tillage or banding fertilizer.

200-SPK-0215

SPIKE

This spike is 5/8" (15mm) thick, 2-1/4" (57mm) wide and 6" (150mm) long. It has a hardened wear pad (52-56 HRC) that extends to the top of the stem to prevent wear in abrasive soil or when working at greater depths.

200-SPK-0230

SPIKE

This spike is 5/8" 15mm) thick, 2" (50mm) wide and 4" (102mm) long with a hardened wear pad (52-56 HRC) for extra life. This tool is made specifically for slurry injection.

410 Series *Speed-Loc™*

Blue Armour options available. Look for the blue shield!

BLUE ARMOUR

4" (410-PWV-0400)

BLUE ARMOUR

6" (410-PWV-0600)
(410-PWV-0608)

SIZE	THICKNESS	PRODUCT NO.
4" (100mm)	1/4" (6mm)	**410-PWV-0400**
6" (150mm)	1/4" (6mm)	**410-PWV-0600**
6" (150mm)	5/16" (8mm)	**410-PWV-0608**
8" (200mm)	1/4" (6mm)	**410-PWV-0800**
8" (200mm)	5/16" (8mm)	**410-PWV-0808**
10" (254mm)	1/4" (6mm)	**410-PWV-1000**
10" (254mm)	5/16" (8mm)	**410-PWV-1008**
12" (305mm)	1/4" (6mm)	**410-PWV-1200**
12" (305mm)	5/16" (8mm)	**410-PWV-1208**
14" (355mm)	1/4" (6mm)	**410-PWV-1400**
14" (355mm)	5/16" (8mm)	**410-PWV-1408**
16" (406mm)	1/4" (6mm)	**410-PWV-1600**
16" (406mm)	5/16" (8mm)	**410-PWV-1608**
18" (457mm)	5/16" (8mm)	**410-PWV-1808**

BLUE ARMOUR

18" (410-PWV-1800)
(410-PWV-1808)

BLUE ARMOUR

16" (410-PWV-1600)
(410-PWV-1608)

BLUE ARMOUR

8" (410-PWV-0800)
(410-PWV-0808)

BLUE ARMOUR

10" (410-PWV-1000)
(410-PWV-1008)

BLUE ARMOUR

12" (410-PWV-1200)
(410-PWV-1208)

BLUE ARMOUR

14" (410-PWV-1400)
(410-PWV-1408)

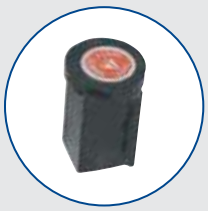

To ensure proper installation of *Speed-Loc™* products, use the appropriate driver listed with each product. For a chart of all drivers see page 80.

The Speed Release Tool 200-REL-1010 must be used when removing openers, sweeps and spikes from *Speed-Loc™* Adapters. See page 80.

410-PWV-0418

CHISEL W/ HARDENED WEAR PAD

This chisel has a 3/8" x 2" hardened wear pad (52-56 HRC) for longer life. The sweep is 5/16" (8mm) thick and 4" (100mm) wide.

This chisel runs at a 13° pitch, steeper than the regular 410 Series chisel and provides more disturbance. This tool is ideal for primary tillage or banding fertilizer.

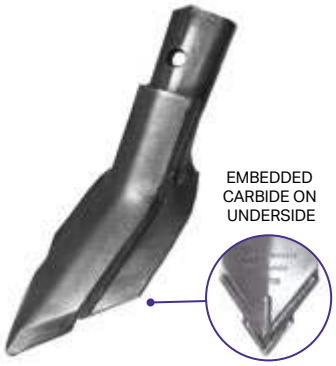

410-PWV-0418ML

MAX LIFE™ CHISEL W/ HARDENED WEAR PAD

This chisel has a 3/8" x 2" hardened wear pad (52-56 HRC) for longer life. The chisel is 5/16" (8mm) thick and 4" (100mm) wide. Heat applied, embedded carbide has been added to the underside.

This chisel runs at a 13° pitch, steeper than the regular 410 Series chisel and provides more disturbance. Ideal for primary tillage or banding fertilizer.

410-PWV-0518

CHISEL W/ HARDENED WEAR PAD

This chisel is 5/16" (8mm) thick x 5" (127mm) wide. It has a 3/8" x 2" hardened wear pad (52-56 HRC) for longer life.

It runs at a 3° pitch, the same as a standard chisel.

410-SPK-0200

SPIKE

This heavy-duty spike is 5/8" (15mm) thick, 2" (50mm) wide and 9" (230mm) long. It has a 3/8" x 2" hardened wear pad (52-56 HRC) for extra life. This tool is ideal for primary tillage or banding fertilizer.

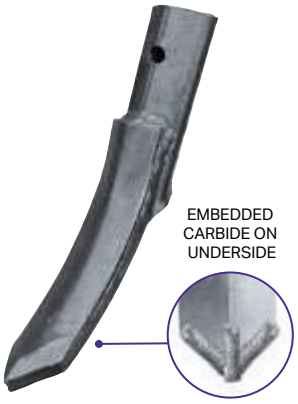

410-SPK-0200ML

MAX LIFE™ SPIKE

This heavy-duty spike is 5/8" (15mm) thick, 2" (50mm) wide and 9" (230mm) long. It has a 3/8" x 2" hardened wear pad (52-56 HRC) for extra life. Heat applied, embedded carbide has been added to the underside. Ideal for primary tillage or banding fertilizer.

Bolt-On Sweeps, Spikes & Chisels

Blue Armour options available. Look for the blue shield!

The Extended Stem Advantage

Bolt-on sweeps fit all makes and models of tillage equipment. The stem, or neck, on these bolt-on sweeps are longer than that of our competitors. This extended stem allows us to punch the bolt holes higher than what you'd see on any other brand of sweep.

The results are reduced stem breakage, less wear on the shank, and less wear and stone damage to the bottom bolt. Less wear on the shank extends the useful life of the sweep, while less stone damage on the bottom bolt means fewer problems when changing shovels.

The extended stem feature saves you time and money.

BLUE ARMOUR

043 Series

FITS: Heavy-duty chisel plows with 43° shanks and 2-1/4" to 2-1/2" (57-64mm) hole centers.

SIZE	THICKNESS	PRODUCT NO.
8" (200mm)	1/4" (6mm)	**043-PWV-0800**
10" (254mm)	1/4" (6mm)	**043-PWV-1000**
12" (305mm)	1/4" (6mm)	**043-PWV-1200**
14" (355mm)	1/4" (6mm)	**043-PWV-1400**
16" (420mm)	1/4" (6mm)	**043-PWV-1600**
18" (460mm)	1/4" (6mm)	**043-PWV-1800**

BLUE ARMOUR

047 Series

FITS: Field cultivators with 47° shanks and 1-3/4" (45mm) hole centers.

SIZE	THICKNESS	PRODUCT NO.
4" (100mm)	1/4" (6mm)	**047-PWV-0400**
7" (180mm)	5/16" (8mm)	**047-PWV-0708**
9" (230mm)	1/4" (6mm)	**047-PWV-0900**
9" (230mm)	5/16" (8mm)	**047-PWV-0908**
10" (254mm)	1/4" (6mm)	**047-PWV-1000**
10" (254mm)	5/16" (8mm)	**047-PWV-1008**
11" (280mm)	1/4" (6mm)	**047-PWV-1100**
12" (305mm)	1/4" (6mm)	**047-PWV-1200**
13" (330mm)	1/4" (6mm)	**047-PWV-1300**
13" (330mm)	5/16" (8mm)	**047-PWV-1308**

BLUE ARMOUR

050 Series

FITS: Heavy-duty chisel plows with 50° shanks and 2-1/4" (57mm) hole centers.

SIZE	THICKNESS	PRODUCT NO.
6" (150mm)	1/4" (6mm)	**050-PWV-0600**
8" (200mm)	1/4" (6mm)	**050-PWV-0800**
10" (254mm)	1/4" (6mm)	**050-PWV-1000**
12" (305mm)	1/4" (6mm)	**050-PWV-1200**
14" (355mm)	1/4" (6mm)	**050-PWV-1400**
16" (420mm)	1/4" (6mm)	**050-PWV-1600**
16" (420mm)	5/16" (8mm)	**050-PWV-1608**
18" (460mm)	1/4" (6mm)	**050-PWV-1800**

070-RCH-0451

REVERSIBLE CHISEL

This reversible chisel is 5/16" (8mm) thick and 4" (100mm) wide. It has 1-3/4" (45mm) bolt hole spacing to fit light and medium-duty field cultivators.

It is used mostly for primary tillage in the fall or early spring.

070-RCH-0452

REVERSIBLE CHISEL

This reversible chisel is 5/16" (8mm) thick and 4" (100mm) wide. It has 2-1/4" to 2-1/2" (57-63mm) bolt hole spacing.

It is used mostly for primary tillage in the fall or early spring.

070-RSP-0200A

REVERSIBLE SPIKE

This reversible spike is 2" (50mm) wide, 5/8" (16mm) thick and 14-1/2" (368mm) long. It has 1-3/4" to 2" (45-57mm) bolt hole spacing.

It is shorter than our other two reversible spikes, and is designed for light to medium-duty field cultivators or for chisel plows where ground clearance in transport is a concern.

070-RSP-0210A

REVERSIBLE SPIKE

FITS: Bourgault chisel plow and Morris LH 755 shank.

On 43° machines the shank curvature may interfere with installation.

This reversible spike is 2" (50mm) wide, 5/8" (16mm) thick and 17" (431mm) long.

It has 2-1/4" (57mm) bolt hole spacing and is flat through the bolt hole section.

070-RSP-0220A

REVERSIBLE SPIKE

FITS: Any chisel plow shank except Bourgault chisel plow and Morris LH 755 shank.

On 43° machines the shank curvature may interfere with installation.

This reversible spike is 2" (50mm) wide, 5/8" (16mm) thick and 16-1/2" (419mm) long.

It has 2-1/4" to 2-1/2" (57-63mm) bolt hole spacing and is curved at the bolt hole section.

030-HLD-2000

HOLDER

FITS: John Deere 2210 47° shank, Salford Curved Flat S-Tine two piece shank.

This holder allows the use of our 200 Series tips, thus providing a much longer wearing alternative to what is currently common in the industry.

Tips sold separately.
See pages 12-13.

MAX LIFE™ Sweeps, Spikes & Chisels

Speed-Loc™ & Bolt-On Options

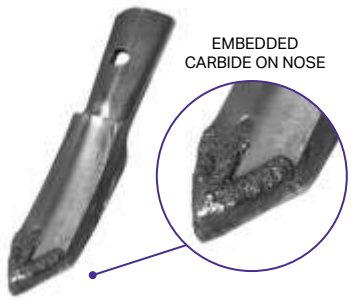

200-SPK-0200ML

QUICK CHANGE SPIKE

FITS: 200 Series *Speed-Loc™* (47° shank)

This spike is 5/8" (15mm) thick, 2-1/4" (57mm) wide and 6" (150mm) long. It has a hardened wear pad (52-56 HRC) for extra life.

Heat applied, embedded carbide has been added to the nose. Ideal for primary tillage or banding fertilizer.

200-PWV-0405ML

QUICK CHANGE CHISEL

FITS: 200 Series *Speed-Loc™* (47° shank)

This chisel is 1/4" (6mm) thick and 4" (100mm) wide with a 3/8" hardened wear pad (52-56 HRC) which increases the life expectancy. Heat applied, embedded carbide has been added to the underside.

The chisel nose runs 1/2" (12mm) lower than the other 200 Series sweeps. The increased pitch improves penetration in hard or compacted ground. Ideal for fall tillage or deep working.

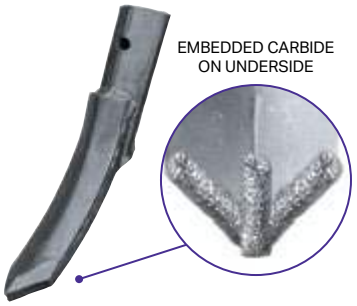

410-SPK-0200ML

QUICK CHANGE SPIKE

FITS: 410 Series *Speed-Loc™* (47° shank)

This spike is 2" (50mm) wide, 5/8" (15mm) thick and 9" (230mm) long. It has a 3/8" x 2" hardened wear pad (52-56 HRC) for extra life. Heat applied, embedded carbide has been added to the underside.

Ideal for primary tillage or banding fertilizer.

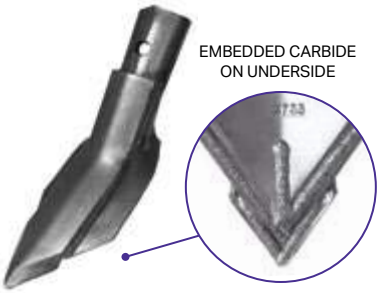

410-PWV-0418ML

QUICK CHANGE CHISEL

FITS: 410 Series *Speed-Loc™* (47° shank)

This chisel has a 3/8" x 2" hardened wear pad (52-56 HRC) for longer life. It is 5/16" (8mm) thick and 4" (100mm) wide. Heat applied, embedded carbide has been added to the underside.

This chisel runs at a 13° pitch, steeper than the regular 410 Series chisel.

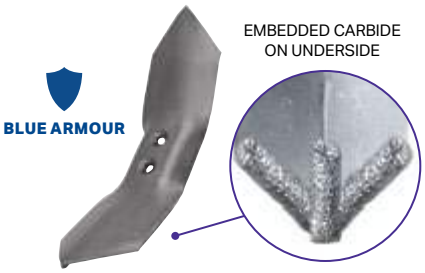

070-RCH-0451ML

REVERSIBLE CHISEL

This reversible chisel has heat applied, embedded carbide added to the underside. It is 5/16" (8mm) thick and 4" (100mm) wide. It has 1-3/4" (45mm) bolt hole spacing to fit light- and medium-duty field cultivators.

It is used mostly for primary tillage in the fall or early spring.

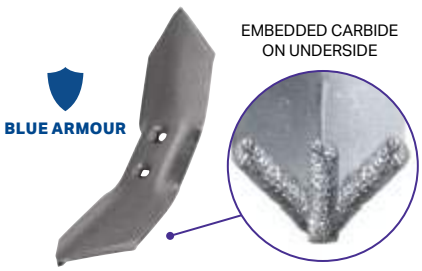

070-RCH-0452ML

REVERSIBLE CHISEL

This chisel is 4" (100mm) wide, 5/16" (8mm) thick and 9" (230mm) long. It has a hardened wear pad (52-56 HRC) for extra life. Heat applied, embedded carbide has been added to the underside. Ideal for primary tillage or banding fertilizer.

Cast Sweeps & Chisel Plow Points

Manufactured by Richmond Brothers Equipment and available through the BTT dealer network!

810-SIH-0700

CAST SWEEP

FITS: Case IH

SIZE: 7"

OVERVIEW: 47°, 1-3/4" Centers, 7/16" Bolt

RICHMOND BROS PART #: RB7IH

810-SIH-0900

CAST SWEEP

FITS: Case IH

SIZE: 9"

OVERVIEW: 47°, 1-3/4" Centers, 7/16" Bolt

RICHMOND BROS PART #: RB9IH

810-SJD-0700

CAST SWEEP

FITS: John Deere

SIZE: 7"

OVERVIEW: 47°, 1-3/4" Centers, 7/16" Bolts

RICHMOND BROS PART #: RB7JD

810-SJD-0900

CAST SWEEP

FITS: John Deere

SIZE: 9"

OVERVIEW: 47°, 1-3/4" Centers, 7/16" Bolts

RICHMOND BROS PART #: RB9JD

810-CPP-0200

CHISEL PLOW POINT

SIZE: 2"

OVERVIEW: Reversible, 1-3/4" to 2-3/4" Hole Centers

RICHMOND BROS PART #: RBDC

810-CPP-0750

CHISEL PLOW POINT

SIZE: 7-1/2"

OVERVIEW: Winged, 50°, 2-1/4" Hole Centers, 1/2" Bolts

RICHMOND BROS PART #: RBPR

810-SKG-0275

SHOVEL

FITS: Kongskilde

SIZE: 2-3/4"

OVERVIEW: Single 7/16" Bolt

RICHMOND BROS PART #: RB234K

810-SKG-0400

SHOVEL

FITS: Kongskilde

SIZE: 4"

OVERVIEW: Duck Foot, Single 7/16" Bolt

RICHMOND BROS PART #: RB4K

See note on page 117 for torque specifications

Deep Rippers

Manufactured by Richmond Brothers Equipment and available through the BTT dealer network!

815-RIH-0300

DEEP RIPPER

FITS: Case IH, DMI

SIZE: 3"

OVERVIEW: 1-1/4" Parabolic, 1 Hole Ripper Point

RICHMOND BROS PART #: RB3C

815-RIH-0500

DEEP RIPPER

FITS: Case IH, DMI

SIZE: 5"

OVERVIEW: 1-1/4" Parabolic, 1 Hole Ripper Point

RICHMOND BROS PART #: RB5C

815-RIH-0700

DEEP RIPPER

FITS: Case IH, DMI

SIZE: 7"

OVERVIEW: 1-1/4" Parabolic, 1 Hole Ripper Point

RICHMOND BROS PART #: RB7C

815-RIH-1000

DEEP RIPPER

FITS: Case IH, DMI

SIZE: 10"

DESCRIPTION: 1-1/4" Parabolic, 1 Hole Ripper Point

RICHMOND BROS PART #: RB10C

815-RIH-1400

DEEP RIPPER

FITS: Case IH, DMI

SIZE: 14"

DESCRIPTION: 1-1/4" Parabolic, 1 Hole Ripper Point

RICHMOND BROS PART #: RB14C

815-RJD-0300

DEEP RIPPER

FITS: John Deere, Kuhn Krause Dominator

SIZE: 3"

DESCRIPTION: 1-1/4" Parabolic, 2 Hole Ripper Point

RICHMOND BROS PART #: RB3

815-RJD-0500

DEEP RIPPER

FITS: John Deere, Kuhn Krause Dominator

SIZE: 5"

DESCRIPTION: 1-1/4" Parabolic, 2 Hole Ripper Point

RICHMOND BROS PART #: RB5

815-RJD-0700

DEEP RIPPER

FITS: John Deere, Kuhn Krause Dominator

SIZE: 7"

DESCRIPTION: 1-1/4" Parabolic, 2 Hole Ripper Point

RICHMOND BROS PART #: RB7

815-RJD-1000

DEEP RIPPER

FITS: John Deere, Kuhn Krause Dominator

SIZE: 10"

DESCRIPTION: 1-1/4" Parabolic, 2 Hole Ripper Point

RICHMOND BROS PART #: RB10

815-RJD-1400

DEEP RIPPER

FITS: John Deere, Kuhn Krause Dominator

SIZE: 14"

DESCRIPTION: 1-1/4" Parabolic, 2 Hole Ripper Point

RICHMOND BROS PART #: RB14

Built rugged for superior abrasion & impact resistance.

The Richmond Brothers Equipment line of ripper points is designed to stand up in adverse, rocky conditions with little to no damage or breakage and has outlasted competitive points in side-by-side field testing.

Wear protection is built into the ripper design, so when it's time to change points, it's fast, easy, and you can reuse attaching hardware.

The high center crown design of Richmond cast cultivator sweeps gives an overall smoother field finish with considerably less slabbing in sticky conditions. Sweeps have an aggressive point and a more durable cutting edge for excellent weed-cutting and an unbeatable wear-life.

Shank Savers & Nuggets

Manufactured by Richmond Brothers Equipment and available through the BTT dealer network!

815-RSS-0010

815-RSS-0020

815-RSS-0040

815-RSS-0010

SHANK SAVER

FITS: Case IH 870 & 875

OVERVIEW: Nugget style design single shank saver. Designed to fill with dirt first so that your tillage tools remain protected.

RICHMOND BROS PART #: RBSSCW

815-RSS-0020

SHANK SAVER

FITS: Krause Dominator

OVERVIEW: Nugget style design single shank saver. Designed to fill with dirt first so that your tillage tools remain protected.

RICHMOND BROS PART #: RBSSDN

815-RSS-0030

SHANK SAVER

FITS: John Deere

OVERVIEW: Nugget style design single shank saver. Designed to fill with dirt first so that your tillage tools remain protected.

RICHMOND BROS PART #: RBSSCW

815-RSS-0040

SHANK SAVER

FITS: Landoll-style Parabolic Shanks

OVERVIEW: Wedge style shank saver offers least draft and helps keep trash from digging into the shank.

RICHMOND BROS PART #: RBSSLW

815-RNW-0010

NUGGET

OVERVIEW: Half moon shape weld-on nugget, old style.

815-RNW-0011

NUGGET

OVERVIEW: Triangle shape weld-on nugget, new style.

815-RNW-0020

NUGGET

OVERVIEW: Landoll Wedge

MAX LIFE™ Scrapers

Keep disks and packer wheels clean and free of debris.

015-JDS-2680

FITS: John Deere, Norwood

REPLACES OEM#:
John Deere 55-4-01605, 5NS55401716

015-SRC-0001

FITS: Bourgault 3310, 3320 & 3420, SE, QDA & XTC, John Deere 1870 Conserva Pak

REPLACES OEM#:
Bourgault N/A
John Deere A88182

NOTES: Packer scraper. Sized to fit multiple mounting brackets. Scraper arm assembly is required on Bourgault machines.

015-SRC-0004

FITS: Wishek Tandem Disk Model 814NT, 842NT & 862NT

REPLACES OEM#:
Wishek W105216
Flaman PWI105216

NOTES: Disk Scraper

010-DEG-1000

FITS: Degelman Pro-Till

REPLACES OEM#:
572955

010-DEG-1001ML

FITS: Degelman Pro-Till

REPLACES OEM#:
572957

NOTES: This scraper has *MAX LIFE™* tungsten embedded carbide applied to wear edges.

Interested in BTT Products?

Try before you buy with the BTT Demo Program.
See page 55.

MAX LIFE
HARROW TINES

Harrow tines to fit most makes and models whether it's grey, blue, red, yellow or green.

6X
LONGER WEAR

3YR
LIMITED WARRANTY

Improved Wear. **Exceptional value.**

The *MAX LIFE™* process infuses tungsten carbide onto the harrow tine creating the toughest and most economical option available. BTT applies its *MAX LIFE* coating to tines manufactured by S3 Wireform, which are known for consistency and longer coil life. Field tests have proven that *MAX LIFE* tines outlast regular tines by a minimum of 6X.

S3 WIREFORM

MAX LIFE™ Tungsten Carbide Harrow Tines

Ask your BTT dealer for the latest additions to our lineup!

010-HAR-3814ML

COIL I.D.: 1-15/16"
DIMENSIONS: 3/8" X 8-1/4" X 14-1/2"
FITS:
Summers/Herman (OEM #8H1110S)

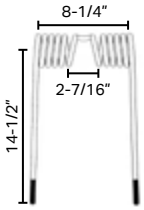

010-HAR-3817ML

COIL I.D.: 1-13/16"
DIMENSIONS: 3/8" X 8" X 17"
FITS:
Bourgault (OEM #2070-27)

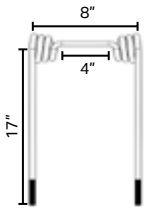

010-HAR-3818ML

COIL I.D.: 1-11/16"
DIMENSIONS: 3/8" X 9" X 16-5/8"
FITS:
Degelman (OEM #143101)

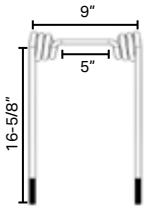

010-HAR-3819ML

COIL I.D.: 2"
DIMENSIONS: 3/8" X 9" X 17"
FITS:
Summers (OEM #8H1150S)

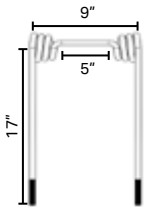

010-HAR-4309ML

COIL I.D.: 2-1/16"
DIMENSIONS: 7/16" X 9" X 16"
FITS:
John Deere (OEM #N236890)

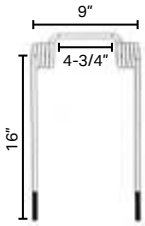

010-HAR-4375ML

COIL I.D.: 2-1/8"
DIMENSIONS: 7/16" X 10" X 20"
FITS:
Bourgault 6000/Delmar 5500
(OEM #2070-77, #2070-77-01)

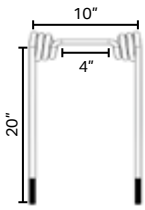

010-HAR-5000ML

COIL I.D.: 2-9/16"
DIMENSIONS: 1/2" X 10" X 20"
FITS:
Salford (OEM #R60000)

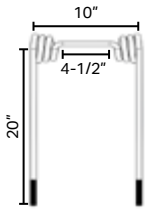

010-HAR-5001ML

COIL I.D.: 2-11/16"
DIMENSIONS: 1/2" X 10" X 22"
FITS:
Bourgault XR770 (OEM #2070-79, 2070-79-01)

NOTES: **Installation bolts sold separately. Please check OEM specs.**
Use 1/2" x 3-3/4" Shoulder Bolt 946-HRG-3754. See page 118.

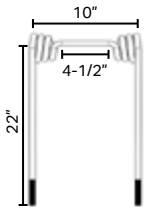

010-HAR-5008ML

COIL I.D.: 2-5/8"
DIMENSIONS: 1/2" X 8" X 20"
FITS:
Bourgault 8800/8810/8910 series Cultivator, SPS 270/360/365, and 9000 Series CP (OEM #2070-76)

NOTES: **Installation bolts sold separately. Please check OEM specs.**
Use 1/2" x 3-3/4" Shoulder Bolt 946-HRG-3754. See page 118.

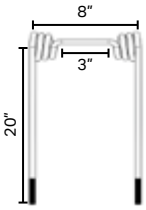

010-HAR-5020ML

COIL I.D.: 2"
DIMENSIONS: 1/2" X 12-1/4" X 20"
FITS:
John Deere (OEM #N236516)

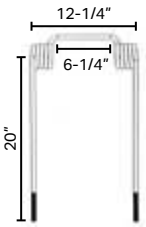

010-HAR-5022ML

COIL I.D.: 2-3/4"
DIMENSIONS: 1/2" X 10" X 22"
FITS:
Elmer's (OEM #21370, 12137000)

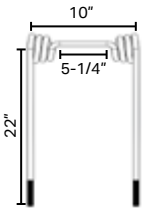

010-HAR-5024ML

COIL I.D.: 2-3/4"
DIMENSIONS: 1/2" X 10" X 24"
FITS:
Rite Way (OEM #404-0039)

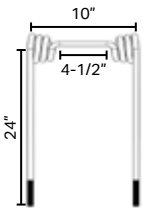

3 YEAR Limited Warranty

From the date of purchase against breakage for three years prorated to a maximum of 100%.

010-HAR-5027ML

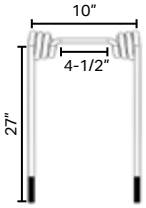

COIL I.D.: 2-5/8"
DIMENSIONS: 1/2" X 10" X 27"
FITS:
Morris (OEM #H27900)

010-HAR-5028ML UNIVERSAL

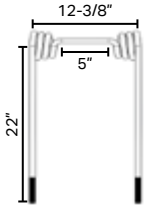

COIL I.D.: 2-9/16"
DIMENSIONS: 1/2" X 12-3/8" X 22"
FITS:
CNH/Flexi-Coil (OEM #87505461)
Summers/Herman (OEM #8H1180S)

010-HAR-5029ML UNIVERSAL

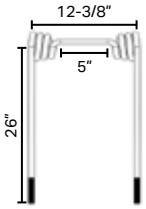

COIL I.D.: 2-5/8"
DIMENSIONS: 1/2" X 12-3/8" X 26"
FITS:
Summers (OEM #8H1184S)

010-HAR-5625ML UNIVERSAL

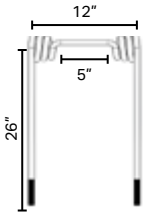

COIL I.D.: 2-5/8"
DIMENSIONS: 9/16" X 12" X 26"
FITS:
Bourgault/Delmar (OEM #2070-28)
Brandt (OEM #B021750)
Flexi-Coil (OEM #90081C, 87445314)
Gates (OEM #120240, 120241)
Pillar (OEM #212-033, 212-145)
Rite Way (OEM #404-0010)
Summers/Herman (OEM #8H1190S)

NOTES: Installation bolts sold separately. Please check OEM specs. Use 1/2" x 3-3/4" Shoulder Bolt 946-HRG-3754. See page 118.

010-HAR-5627ML

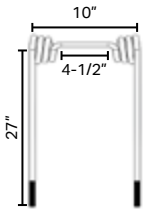

COIL I.D.: 2-5/8"
DIMENSIONS: 9/16" X 10" X 27"
FITS:
Morris (OEM #H49499)

010-HAR-5628ML

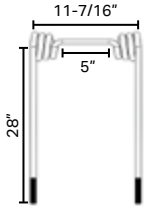

COIL I.D.: 2-3/4"
DIMENSIONS: 9/16" X 11-7/16" X 28"
FITS:
Rite Way (OEM #404-0028, 404-0035)

NOTES: Installation bolts sold separately. Please check OEM specs. Use 1/2" x 3-3/4" Shoulder Bolt 946-HRG-3754. See page 118.

010-HAR-6230ML

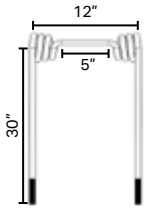

COIL I.D.: 2-3/4"
DIMENSIONS: 5/8" X 12" X 30"
FITS:
Degelman (OEM #143509)

010-HAR-6250ML UNIVERSAL

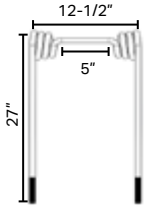

COIL I.D.: 2-5/8"
DIMENSIONS: 5/8" X 12-1/2" X 27"
FITS:
Bourgault (OEM #2070-70, 8606-13)
Brandt (OEM #B021751, C516584)
Gates (OEM #120229, 120230)
Rite Way (OEM #404-0030)
Summers/Herman (OEM #8H1195S)

NOTES: Installation bolts sold separately. Please check OEM specs. Use 1/2" x 3-3/4" Shoulder Bolt 946-HRG-3754. See page 118.

010-DEG-5626ML

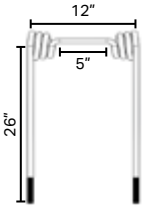

COIL I.D.: 2-5/8"
DIMENSIONS: 9/16" X 12" X 26"
FITS:
Degelman (OEM #143112, 143517)

010-DEG-6227ML

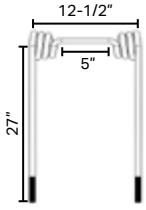

COIL I.D.: 2-5/8"
DIMENSIONS: 5/8" X 12-1/2" X 27"
FITS:
Degelman (OEM #143113, 143507, 143516)

MAX LIFE™ Harrow Tine Quick Reference

Ask your BTT dealer for the latest additions to our lineup!

OEM	OEM NUMBER	DIMENSIONS	BTT PART NUMBER
BOURGAULT / DELMAR			
BOURGAULT	#2070-27	3/8" x 8" x 17"	010-HAR-3817ML
BOURGAULT / DELMAR	#2070-28	9/16" x 12" x 26"	010-HAR-5625ML Universal
BOURGAULT	#2070-70	5/8" x 12-1/2" x 27"	010-HAR-6250ML Universal
BOURGAULT 9500CP	#2070-76	1/2" x 8" x 20"	010-HAR-5008ML
BOURGAULT 6000 / DELMAR 5500	#2070-77	7/16" x 10" x 20"	010-HAR-4375ML
BOURGAULT / DELMAR	#2070-77-01	7/16" x 10" x 20"	010-HAR-4375ML
BOURGAULT XR770	#2070-79	1/2" x 10" x 22"	010-HAR-5001ML
BOURGAULT XR770	#2070-79-01	1/2" x 10" x 22"	010-HAR-5001ML
BOURGAULT	#8606-13	5/8" x 12-1/2" x 27"	010-HAR-6250ML Universal
BRANDT			
	#B021750	9/16" x 12" x 26"	010-HAR-5625ML Universal
	#B021751	5/8" x 12-1/2" x 27"	010-HAR-6250ML Universal
	#C516584	5/8" x 12-1/2" x 27"	010-HAR-6250ML Universal
CNH / FLEXI-COIL			
	#87505461	1/2" x 12-3/8" x 22"	010-HAR-5028ML Universal
	#90081C	9/16" x 12" x 26"	010-HAR-5625ML Universal
	#87445314	9/16" x 12" x 26"	010-HAR-5625ML Universal
DEGELMAN			
	#143101	3/8" x 9" x 16-5/8"	010-HAR-3818ML
	#143509	5/8" x 12" x 30"	010-HAR-6230ML
	#143112	9/16" x 12" x 26"	010-DEG-5626ML
	#143517	9/16" x 12" x 26"	010-DEG-5626ML
	#143113	5/8" x 12-1/2" x 27"	010-DEG-6227ML
	#143507	5/8" x 12-1/2" x 27"	010-DEG-6227ML
	#143516	5/8" x 12-1/2" x 27"	010-DEG-6227ML
ELMER'S			
	#21370	1/2" x 10" x 22"	010-HAR-5022ML
	#12137000	1/2" x 10" x 22"	010-HAR-5022ML
GATES			
	#120240	9/16" x 12" x 26"	010-HAR-5625ML Universal
	#120241	9/16" x 12" x 26"	010-HAR-5625ML Universal
	#120229	5/8" x 12-1/2" x 27"	010-HAR-6250ML Universal
	#120230	5/8" x 12-1/2" x 27"	010-HAR-6250ML Universal
JOHN DEERE			
	#N236516	1/2" x 12-1/4" x 20"	010-HAR-5020ML
	#N236890	7/16" x 9" x 16"	010-HAR-4309ML
MORRIS			
	#H27900	1/2" x 10" x 27"	010-HAR-5027ML
	#H49499	9/16" x 10" x 27"	010-HAR-5627ML
PILLAR			
	#212-033	9/16" x 12" x 26"	010-HAR-5625ML Universal
	#212-145	9/16" x 12" x 26"	010-HAR-5625ML Universal
RITE WAY			
	#404-0039	1/2" x 10" x 24"	010-HAR-5024ML
	#404-0010	9/16" x 12" x 26"	010-HAR-5625ML Universal
	#404-0028	9/16" x 11-7/16" x 28"	010-HAR-5628ML
	#404-0035	9/16" x 11-7/16" x 28"	010-HAR-5628ML
	#404-0030	5/8" x 12-1/2" x 27"	010-HAR-6250ML Universal
SALFORD			
	#R60000	1/2" x 10" x 20"	010-HAR-5000ML
SUMMERS / HERMAN			
	#8H1110S	3/8" x 8-1/4" x 14-1/2"	010-HAR-3814ML
	#8H1150S	3/8" x 9" x 17"	010-HAR-3819ML
	#8H1180S	1/2" x 12-3/8" x 22"	010-HAR-5028ML Universal
	#8H1184S	1/2" x 12-3/8" x 26"	010-HAR-5029ML Universal
	#8H1190S	9/16" x 12" x 26"	010-HAR-5625ML Universal
	#8H1195S	5/8" x 12-1/2" x 27"	010-HAR-6250ML Universal

BOOST YOUR PERFORMANCE

The research and development efforts in metallurgy and heat treatment have resulted in a line of coulters and disk blades that outperform the competition. Special boron-carbon steel along with our patented transitional heat treatment results in a consistently longer wearing blade with less dulling on the leading edge and without sacrificing durability. Niaux 200 is the disk blade of choice for leading OEMs and farmers around the world.

Niaux 200 uses **patented technology** that has set a new **quality standard** in the field of agricultural disk blades. This range of products for seeders, disk harrows and tillage equipment represent a **great long-term investment.**

LONG-LASTING

Thanks to increased hardness in the working area, Niaux 200 disks have the longest lifespan on the market.

EFFECTIVE

Niaux 200 disk blades ensure a perfect cutting quality throughout their lifetime.

ROBUST

Niaux 200 disk blades are very resilient and are designed to resist extreme shocks and deformations.

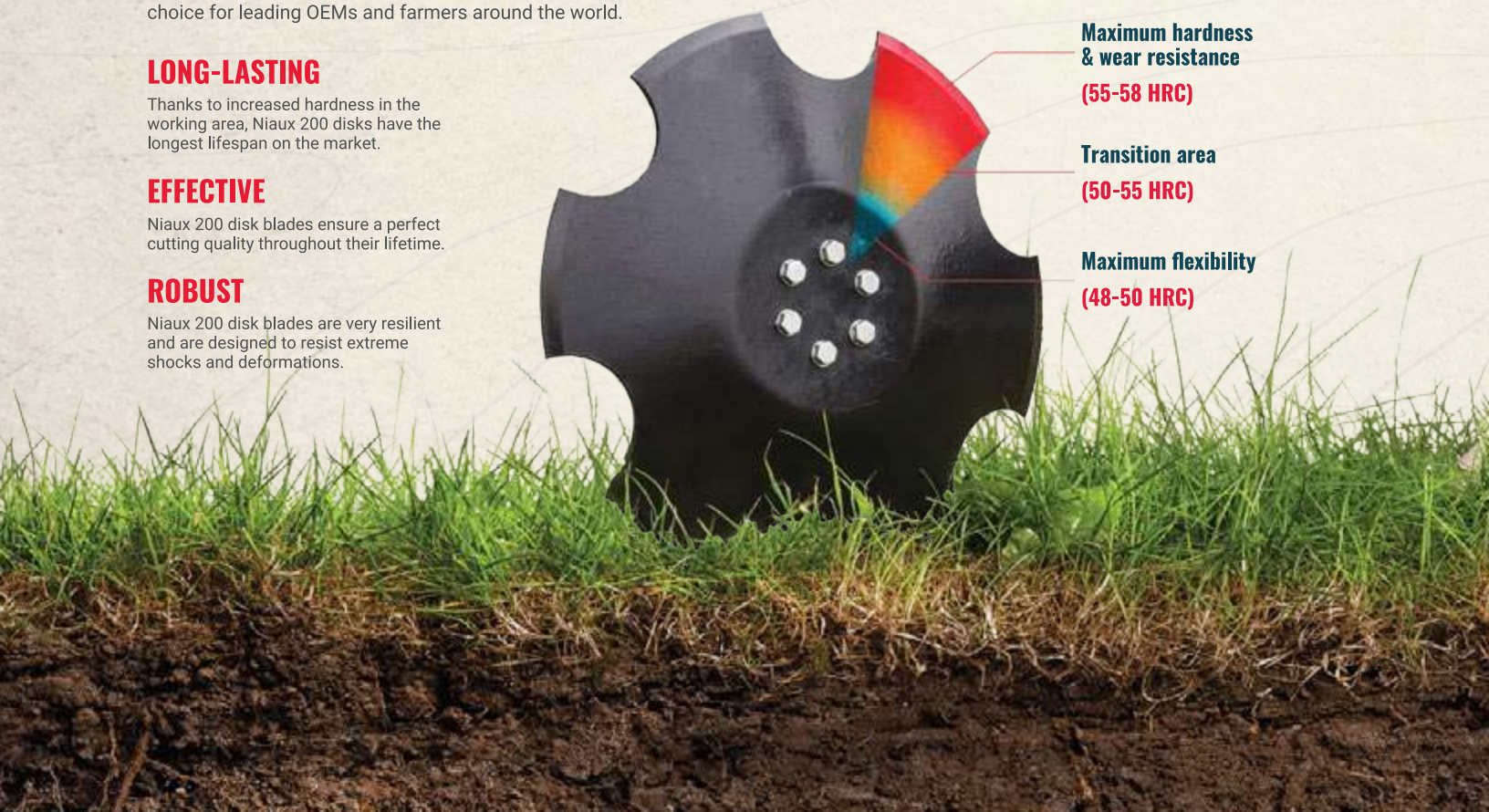

70 YEARS OF RESEARCH AND INNOVATION

Unrivaled know-how, listening to your requirements.

Our philosophy: develop ever more durable and innovative wear parts. The **Niaux 200** quality that we offer today sets a new standard in the field of agricultural disk blades.

THE AUTO SHARPENING DISK BLADE

Quality of cut is a key factor in crop residue management. Thanks to the unique steel structure, **Niaux 200** disk blades get sharper as they wear. The flawless steel structure and better wear resistance of **Niaux 200** disk blades allow them to remain sharp in all conditions.

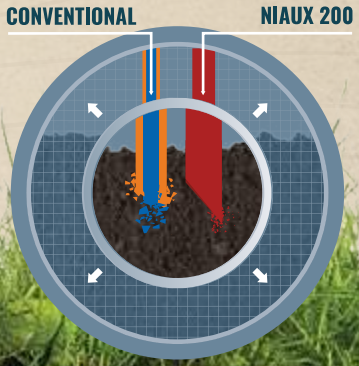

500-200-1025

FITS: AMITY / CONCORD

Replaces OEM Part #	34354
Disk Type	Flat Coulter
Dimensions	18″ x 5mm
Pilot Hole Size	3.625″
# of Bolt Holes	4

500-200-1000

FITS: BOURGAULT

Bourgault MRB® III, 3720 Coulter Drill Original Manufacturer's Part

Replaces OEM Part #	2085-04
Disk Type	Flat Coulter Single Bevel
Dimensions	20-1/2″ x 5mm
Pilot Hole Size	3.660″
# of Bolt Holes	4 Beveled Holes

926-PRG-1250

905-NRG-5000

500-200-1015

FITS: BOURGAULT

Bourgault MRB® ID, 3820 Coulter Drill Original Manufacturer's Part

Replaces OEM Part #	2085-05
Disk Type	Flat Coulter Single Bevel
Dimensions	20-1/2″ x 5mm
Pilot Hole Size	3.660″
# of Bolt Holes	4

961-CRG-1005

905-NRG-5000

When ordering a full set of 500-200-1015, you will need 2 of the 500-200-1000 for the hitch/hinge assembly.

500-200-1005

FITS: CNH

Case: IH 500, 5w00T
NH: P2080 & P2085

Replaces OEM Part #	87488385
Disk Type	Flat Coulter
Dimensions	18″ x 5mm
Pilot Hole Size	3.5″
# of Bolt Holes	4

All product and company names are trademarks™ or registered® trademarks of their respective holders. Use of them does not imply any affiliation with or endorsement by them. MRB®, Mid Row Banders®, and Mid Row Bander® are Trademarks of Bourgault Industries Ltd. & used with permission.

517-200-1020

FITS: CNH / DMI

CIH, DMI: 530C & 730C
CNH: 870 & 875
Salford: I-5100 & 5200

Replaces OEM Part #	87457566
Disk Type	Plain Concave
Dimensions	24.75" x 6.5mm
Pilot Hole Size	4"
# of Bolt Holes	5

517-200-1005

FITS: DEGELMAN

Pro-Till
Original Manufacturer's Part

Replaces OEM Part #	143556
Disk Type	Plain Concave
Dimensions	20" x 6.5mm
Pilot Hole Size	N/A
# of Bolt Holes	4

517-200-1010

FITS: DEGELMAN

Pro-Till
Original Manufacturer's Part

Replaces OEM Part #	143550
Disk Type	Plain Concave
Dimensions	18" x 6.5mm
Pilot Hole Size	N/A
# of Bolt Holes	4

517-200-1025

FITS: DEGELMAN

Pro-Till
Original Manufacturer's Part

Replaces OEM Part #	143562
Disk Type	Plain Concave
Dimensions	22" x 6.5mm
Pilot Hole Size	N/A
# of Bolt Holes	4

522-200-1010

FITS: DEGELMAN

Pro-Till
Original Manufacturer's Part

Replaces OEM Part #	143557
Disk Type	U Notch Concave
Dimensions	20" x 6.5mm
Pilot Hole Size	N/A
# of Bolt Holes	4

522-200-1020

FITS: DEGELMAN

Pro-Till
Original Manufacturer's Part

Replaces OEM Part #	143553
Disk Type	Double V Notch Concave
Dimensions	20" x 6.5mm
Pilot Hole Size	N/A
# of Bolt Holes	4

AVAILABLE IN LATE 2024!
BLADES TO FIT

AMAZONE	SPEED-TILLER / CASE IH	WISHEK
Notched	Notched	Smooth
20" x 5mm	24" x 6.5mm	28" x 8mm

522-200-1025

FITS: DEGELMAN

Pro-Till
Original Manufacturer's Part

Replaces OEM Part #	143566
Disk Type	Double V Notch Concave
Dimensions	22" x 6.5mm
Pilot Hole Size	N/A
# of Bolt Holes	4

522-200-1030

FITS: DEGELMAN

Pro-Till
Original Manufacturer's Part

Replaces OEM Part #	143563
Disk Type	U Notch Concave
Dimensions	22" x 6.5mm
Pilot Hole Size	N/A
# of Bolt Holes	4

510-200-1000

FITS: GREAT PLAINS

Turbo Chopper, Turbo-Max , Turbo Till & Turbo Till II

Replaces OEM Part #	820-011C
Disk Type	20 Wave RT Coulter
Dimensions	20.5" x 6.5mm
Pilot Hole Size	1.75" Round
# of Bolt Holes	N/A

511-200-1000

FITS: GREAT PLAINS

Vantage I Fertilizer Coulter, Zone Coulter & HD Utility Coulter

Replaces OEM Part #	820-215C
Disk Type	20 Wave RT Coulter
Dimensions	18" x 5mm
Pilot Hole Size	4"
# of Bolt Holes	4

500-200-1010

FITS: JOHN DEERE

JD 750, 752, 1560, 1590, 1690, 1850, 1860, 1890, 1890 CCS, 1895, 1990 & 1835 SFP Air Hoe, N500, N500F & H500F

Replaces OEM Part #	N283804
Disk Type	Flat Coulter
Dimensions	18" x 5mm
Pilot Hole Size	3"
# of Bolt Holes	4

517-200-1030

FITS: JOHN DEERE / NORWOOD

JD: 2680H
Norwood: Kwik-Till

Replaces OEM Part #	JD NS90340003 NW 18199A & 19028A
Disk Type	Plain Concave
Dimensions	20" x 6.5mm
Pilot Hole Size	N/A
# of Bolt Holes	4

522-200-1040

FITS: JOHN DEERE / NORWOOD

JD: 2680H
Norwood: Kwik-Till

Replaces OEM Part #	JD NS90340002 NW 18354A
Disk Type	Notched Concave
Dimensions	20" x 6.5mm
Pilot Hole Size	N/A
# of Bolt Holes	4

522-200-1000

FITS: LEMKEN

Heliodor 8

Replaces OEM Part #	3490471
Disk Type	Notched Concave
Dimensions	18" x 5mm
Pilot Hole Size	N/A
# of Bolt Holes	6

522-200-1005

FITS: LEMKEN

Rubin 9

Replaces OEM Part #	3490467
Disk Type	Notched Concave
Dimensions	24.625" x 6mm
Pilot Hole Size	N/A
# of Bolt Holes	5

522-200-1035

FITS: LEMKEN

Heliodor 9

Replaces OEM Part #	34910027
Disk Type	Notched Concave
Dimensions	20" x 5mm
Pilot Hole Size	N/A
# of Bolt Holes	4

500-200-1020

FITS: PILLAR

DH Series

Replaces OEM Part #	206-007
Disk Type	Flat Coulter
Dimensions	18" x 5mm
Pilot Hole Size	3.625"
# of Bolt Holes	4

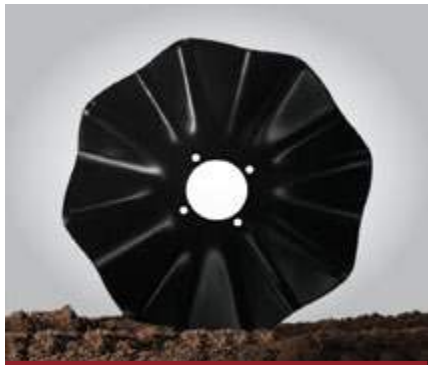

505-200-1000

FITS: SALFORD

Salford I-1100 & I-1200

Replaces OEM Part #	10010764 & CT512008
Disk Type	8 Wave Coulter
Dimensions	20" x 4.5mm
Pilot Hole Size	4"
# of Bolt Holes	4

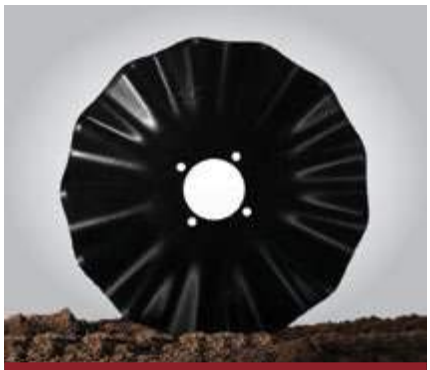

505-200-1005

FITS: SALFORD

Salford I-1100 & I-1200

Replaces OEM Part #	10010766 & CT512013
Disk Type	13 Wave Coulter
Dimensions	20" x 4.5mm
Pilot Hole Size	4"
# of Bolt Holes	4

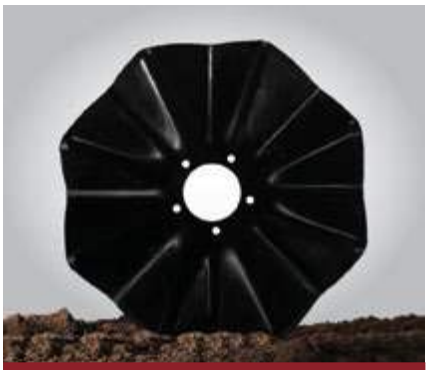

505-200-1010

FITS: SALFORD

Salford I-2100, I-2200 (all)
Salford I-4100 (back 2 rows)
Salford I-4200 (all but front row)

Replaces OEM Part #	10010768 & CT512208
Disk Type	8 Wave Coulter
Dimensions	21.75" x 5mm
Pilot Hole Size	4"
# of Bolt Holes	5

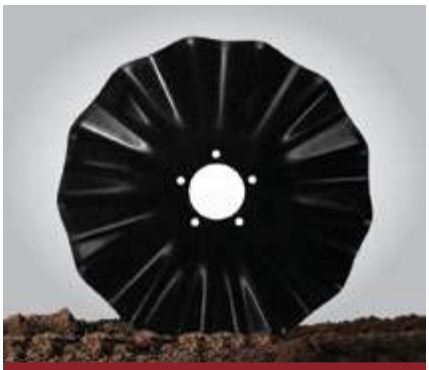

505-200-1015

FITS: SALFORD

Salford I-2100, I-2200 (all)
Salford I-4100 (back 2 rows)
Salford I-4200 (all but front row)

Replaces OEM Part #	CT512213 & 10010769
Disk Type	13 Wave Coulter
Dimensions	22.75" x 5mm
Pilot Hole Size	4"
# of Bolt Holes	5

517-200-1015 & 1017

FITS: SALFORD / SUNFLOWER

Salford: I-4100 (first 2 rows), I-4200 (front row) & I-5100 (all)
Sunflower: 4410, 4411, 4412, 4510, 4511 & 4530

Replaces OEM Part #	CT512250 & 10010771
Disk Type	Plain Concave
Dimensions	
517-200-1015	22.25" x 5mm
517-200-1017	22.25" x 6.5mm
Pilot Hole Size	4"
# of Bolt Holes	5

517-200-1020

FITS: SALFORD / CNH / DMI

Salford: I-5100 & 5200
CIH/DMI: 530C & 730C
CNH: 870 & 875

Replaces OEM Part #	CT503059 & 10010727
Disk Type	Plain Concave
Dimensions	24.75" x 6.5mm
Pilot Hole Size	4"
# of Bolt Holes	5

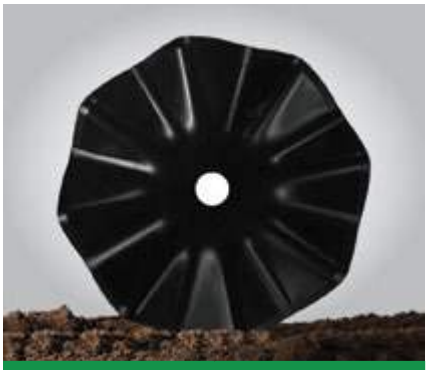

505-200-1020

FITS: SUMMERS

Summers Super Coulter & Coulter Chisel

Replaces OEM Part #	8J1020
Disk Type	8 Wave Coulter
Dimensions	20" x 6.5mm
Pilot Hole Size	2" Round
# of Bolt Holes	N/A

505-200-1025

FITS: SUMMERS

Summers Super Coulter & Coulter Chisel

Replaces OEM Part #	8J1021N
Disk Type	8 Wave Notch Coulter
Dimensions	22.5" x 6.5mm
Pilot Hole Size	2" Round
# of Bolt Holes	N/A

515-200-1000

FITS: SUMMERS

Summers DK Series Disk

Replaces OEM Part #	8K5026
Disk Type	Plain Concave
Dimensions	26.25" x 6.5mm
Pilot Hole Size	2" Round
# of Bolt Holes	N/A

521-200-1000

FITS: SUMMERS

Summers DT Series Disk

Replaces OEM Part #	8K5025N
Disk Type	Notched Concave
Dimensions	25" x 8mm
Pilot Hole Size	2" Round
# of Bolt Holes	N/A

500-200-1030

FITS: YETTER / AGPRO

Replaces OEM Part #	Yetter 2571-169
Disk Type	Flat Coulter
Dimensions	18" x 4.5mm
Pilot Hole Size	3.9375"
# of Bolt Holes	4

150 Series Standard Grade Disk Blades

Our 150 series disk blades are manufactured of boron steel, designed to wear and perform similar to many OEM & other service part disk blades. Full replacement warranty on manufacturer defects, and 3 year pro-rated warranty on breakage.

PART #	FITS	REPLACES OEM PART NUMBER
500-150-1000	Bourgault MRBIII, 20.5" x 5mm	2085-04
500-150-1005	CNH Seed Drills, 18" x 5mm	87488385
500-150-1010	JD Seed Drills, 18" x 5mm	N283804
505-150-1000	Salford, 20" x 4.5mm 8 Wave	10010764 & CT512008
505-150-1005	Salford, 20" x 4.5mm 13 Wave	10010766 & CT512013
505-150-1010	Salford, 22" x 5mm 8 Wave	10010768 & CT512208
505-150-1015	Salford, 22" x 5mm 13 Wave	10010769 & CT512213
517-150-1030	JD/Norwood, 20"x 6.5mm Plain, Rep.	JD NS90340003, NW 18199A &19028A
522-150-1040	JD/Norwood, 20"x 6.5mm Notched	JD NS90340002, NW 18354A
517-150-1005	Degelman Pro-Till, 20"x 6.5mm Plain	143556
517-150-1025	Degelman Pro-Till, 22"x 6.5mm Plain	143562
522-150-1010	Degelman Pro-Till, 20"x 6.5mm Notched	143557
522-150-1030	Degelman Pro-Till, 22"x 6.5mm Notched	143563

CHECK WITH YOUR DEALER ON AVAILABILITY

Can't find the disk you're looking for?
Contact us to chat with a BTT team member!

For the most current list of disk options, visit tillagetools.ca.

MAX LIFE
WELDABLE WEAR STRIPS

EXTENDED WEAR PART LIFE.
EXCEPTIONAL VALUE.

Built to extend the life of your wear parts, where you need it, when you need it.

MAX LIFE weldable wear strips are made using the same weld-infused embedded tungsten carbide found on our harrow tines.

They have a 3/16" base and are available in multiple sizes.

Use a full strip or break them into tiles.

5
SIZES AVAILABLE

CUSTOM WEAR PROTECTION. MORE POTENTIAL.

MAX LIFE Weldable Wear Strips can be heated and bent to protect curved areas, increasing the usage scenarios on a wide range of machines and ground engaging tools. It's ideal for combating sliding wear, preventing thinning, or "washing" and in situations where brazing is not an option, and hard facing is too slow. Machines that most commonly use wear strips are seed drills, subsoilers, cultivators, ploughs, manure spreaders, root harvesters, sugar cane harvesters, buckets, mowers, augers, and scrapers.

OTHER SIZES AVAILABLE UPON REQUEST.

Unique Farms. Unique Needs.

Our line of specialty products is always expanding. Tell us what you'd like to see!

010-WWS-0662

WELDABLE WEAR STRIP

SIZE: 7.6" long x 0.6" wide, divided into 6 tiles.

OVERVIEW: Heat, bend and protect flat or curved surfaces on various machines and ground engaging tools such as seed drills, subsoilers, ploughs, cultivators, buckets, manure spreaders, root harvesters, mowers, augers and scrapers.

010-WWS-1202

WELDABLE WEAR STRIP

SIZE: 8" long x 0.5" wide, divided into 2 tiles.

OVERVIEW: Heat, bend and protect flat or curved surfaces on various machines and ground engaging tools such as seed drills, subsoilers, ploughs, cultivators, buckets, manure spreaders, root harvesters, mowers, augers and scrapers.

010-WWS-1509

WELDABLE WEAR STRIP

SIZE: 7.5" long x 0.6" wide, divided into 9 tiles.

OVERVIEW: Heat, bend and protect flat or curved surfaces on various machines and ground engaging tools such as seed drills, subsoilers, ploughs, cultivators, buckets, manure spreaders, root harvesters, mowers, augers and scrapers.

010-WWS-2506

WELDABLE WEAR STRIP

SIZE: 9.5" long x 1" wide, divided into 6 tiles.

OVERVIEW: Heat, bend and protect flat or curved surfaces on various machines and ground engaging tools such as seed drills, subsoilers, ploughs, cultivators, buckets, manure spreaders, root harvesters, mowers, augers and scrapers.

010-WWS-9520

WELDABLE WEAR STRIP

SIZE: 9.5" long x 2" wide, divided into 6 tiles.

OVERVIEW: Heat, bend and protect flat or curved surfaces on various machines and ground engaging tools such as seed drills, subsoilers, ploughs, cultivators, buckets, manure spreaders, root harvesters, mowers, augers and scrapers.

Cost Effective Solution

Investing in weldable wear strips can provide significant cost savings in the long run. By protecting expensive equipment and machinery from wear and damage, they help avoid costly repairs, replacements, and downtime.

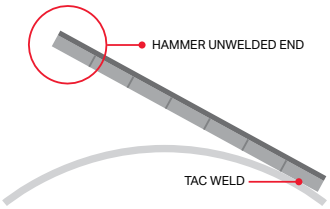

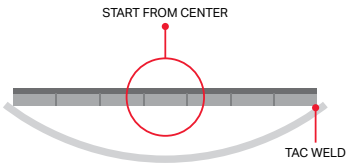

See page 117 for installation instructions

Unique Farms. Unique Needs.

Our line of specialty products is always expanding. Tell us what you'd like to see!

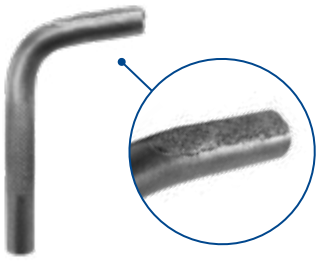

010-BTP-0750

THRESHING PIN

FITS: Pickett Equipment & Colombo

OVERVIEW: A milled pocket on the threshing pin keeps the *MAX LIFE™* embedded carbide deposit close to flush with the profile of the pin, preventing seed damage. The fine grit of the carbide coating handles crops gently but wears much longer than standard threshing pins.

NOTES: Use existing hardware to install pins.

702-DEG-0012

MANURE SPREADER WEAR TIPS

FITS: Degelman M SERIES Manure Spreader

REPLACES OEM#: 246693

OVERVIEW: Wear tip with *MAX LIFE™* embedded carbide is applied to high wear areas.

> We ran the *MAX LIFE* Threshing Pins as a demo to see if we could get more life out of our pins. The pins ran for 800 acres, and we found we had to switch out competitors' pins twice and were still running the *MAX LIFE* ones. Using the *MAX LIFE* pins means better quality thrashing with less time and cost on maintenance.
>
> **Tim van der Hoek, Alberta, Canada**

Unique Farms. Unique Needs.

Our line of specialty products is always expanding. Tell us what you'd like to see!

010-PHT-9010 UNIVERSAL

POWER HILLER TINES

FITS: Struik and Baselier

SIZE: 8-3/4"

OVERVIEW: Bolt-on, universal short length tine is more durable than tile carbide in rocky conditions.

Laser cut from hardened steel with *MAX LIFE™* weld-infused embedded tungsten carbide applied to the leading edge for a longer wear life.

NOTES: Use existing hardware to install.

010-PHT-9015 UNIVERSAL

POWER HILLER TINES

FITS: Baselier and AVR

SIZE: 11"

OVERVIEW: Bolt-on, universal medium length tine is more durable than tile carbide in rocky conditions.

Laser cut from hardened steel with *MAX LIFE™* weld-infused embedded tungsten carbide applied to the leading edge for a longer wear life.

NOTES: Use existing hardware to install.

ADDITIONAL OPTIONS

POWER HILLER TINES

MAX LIFE™ Power Hiller Tines are available in a variety of lengths to fit Struik, AVR, Baselier, Grimme, Bau-Man and more.

Our line-up is always expanding!

Ask your BTT Dealer about current power hiller tine options or contact our team with your suggestions.

Accessories & Reference

047-ACC-1001

Helps direct the flow of seed in a focused row behind the 047-ASY-1000, 047-ASY-1005P, or 675 Series openers.

047-ACC-1002

2-1/4" center to center hole spacing. Allows you to adapt to any shank with an open bottom hole. Keeps the bottom bolt in place on the John Deere 1820, 1830 & 2410.

047-CAP-1001

This cap is a replacement cap for 047-ASY-1000 and 047-ASY-1005P. See expanded assemblies for the right cap for your opener.

100-WDG-0700

This 7° urethane wedge is designed to correct the pitch of 100-QCA-5010 and 200-QCA-5010 adapters on 43° shanks.

200-WDG-0206

This 2° urethane wedge has 45-80mm bolt hole spacing. It is used to obtain proper sweep pitch on certain shanks.

200-WDG-0506

This 5° urethane wedge has 45-80mm bolt hole spacing. It is used to obtain proper sweep pitch on certain shanks.

200-WDG-1000

This 10° urethane wedge has 45-80mm bolt hole spacing. It is used to obtain proper sweep pitch on certain shanks.

200-WDG-1006

This 10° urethane wedge has 45-80mm bolt hole spacing. It is used to obtain proper sweep pitch on certain shanks.

400-WDG-0300

This 3° urethane wedge is designed to correct the pitch of 410-QCA-5010 adapters on a 47° chisel plow shank, as well as the 50° bolt-on sweeps.

400-WDG-0700

This 7° urethane wedge is designed to correct the pitch of 410-QCA-5010 adapters when installing on a 43° shank. It should also be used with the 600 Series knives when installing on a 43° shank.

880-WDG-0300

This cast wedge adapter is designed for our 047, 610 and 612 seeding openers on all John Deere shanks.

880-WDG-0301

This cast wedge adapter is designed for our 047, 610 and 612 seeding openers on all 50° curved bottom shanks, excluding John Deere.

600-HHA-0750

This stainless steel hose holder mounts on any C-shank to hold the NH3 hose in place. It is completely height adjustable.

614-ACC-1000

This bushing is necessary when using NH3 with the 614-TIP-2711 and 614-TIP-2712.

650-ACC-1000

This bracket limits the tripping distance of 650 fertilizer knives on JD 1870 Conserva Pak drills. Use with all fertilizer knives excluding:
650-HLD-1000GL
650-HLD-1000GN

650-ACC-1010

This bracket limits the tripping distance of 650 fertilizer knives on JD 1870 Conserva Pak drills. Use with 650-HLD-1000GL & 650-HLD-1000GN knives.

680-ACC-0001

This spacer plate is required for the Concord when installing any edge on product.

680-ACC-0004

This conversion tab replaces the fertilizer tube on the 680-HLD-2000 so it can be converted to a single shoot opener.

680-ACC-1000

Helps direct the flow of seed in a focused row behind 680-ASY-1000 openers. Use with openers prior to 2012.

694-ACC-1000

This spacer is required when installing Titan Openers on anything except Concord.

880-ASY-1010

This assembly is required to convert the standard 3/16" (5mm) O.D. liquid phos hose to 1/4" I.D. liquid phos delivery hoses on 047-ASY-1005P and 680-ASY-1000P.

880-BAR-3750

3/8" barb & 1/8" NPT coupler assembly used to convert standard ½" NH3 knives to fit a fertilizer hose with 3/8" ID. The 1/8" NPT fitting threads into the ½" Standard NH3 pipe and the 3/8" barb then fits the 3/8" ID fertilizer hose.

300-BSH-1200

This bushing adapts air hoses from a 1-1/8" (28mm) O.D. hose up to a 1-1/4" (32mm) O.D. hose.

880-BSH-1000

This bushing is to be used with all VOS tips.

880-BSH-1003

This bushing is part of the 880-TUB-1011 & 880-TUB-1012 Fertilizer (Aqua NH3 + P) inserts. The bushings are used to center the Aqua NH3 & P pipes in the tips of the 'VOS' Triple Shoot knife assemblies.

880-BSH-1130

This bushing is required when using 1-1/8" (28mm) O.D. hose.

880-BSH-1150

This bushing adapts air hoses from a 1-1/4" (32mm) O.D. hose up to a 1-1/2" (38mm) O.D. hose.

880-BSH-1170

This bushing adapts 1-1/2" (38mm) O.D. hose to a 1-1/4" (32mm) hose.

880-BSH-2000

This bushing is to be used on John Deere split shanks with bolt ons and QCAs.

880-CPL-1010

This barb and compression fitting is used when going from 1/4" (6mm) I.D. liquid phos tube to 3/16" stainless steel liquid phos tubes.

880-CPL-2500

This coupler is used to attach a 1/4" (6mm) O.D. liquid phos tube. Included with all new liquid phos openers.

880-ORF-0001

This orifice is used to concentrate and direct the flow of liquid fertilizer on 200-VRT-1061 and 200-KNF-0863.

880-GRD-1000

This guard is used to protect liquid hose on all side band liquid openers in heavy trash conditions.

880-GRD-1010

This guard is used to protect liquid phos tubes on 047 & 680 liquid phos openers in heavy trash conditions.

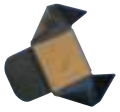

880-HCL-0001

This clip eliminates hose movement, as the sharp corners embed into the granular pipe.

880-HCL-0004

This 3/4" ear clamp is used to secure the rubber sleeve to the 1/2" pipe to protect the liquid phos tube.

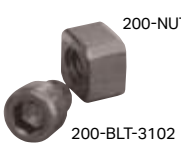

200-BNC-3100

Bolt and nut combo used to secure single shoot, paired row and side band tips onto holders.

The bolt and nut should be changed when changing the tip.

Over torquing will result in difficulty when removing.

300-BNC-4414

Bolt and nut combo used to secure 600 series tips onto the 410, 599, 600 & 602 Series knife holders.

Nut and bolt can be ordered separately.

The bolt and nut should be changed when changing the tip to maintain locking ability of the nut.

600-BNC-5000

Bolt and nut combo used to secure 600 series tips onto the 410, 599, 600 & 602 Series knife holders.

Nut and bolt can be ordered separately.

The bolt and nut should be changed when changing the tip to maintain locking ability of the nut.

200-ASY-0001

This replacement rear assembly works with all Non-Freeze NH3 *Speed-Loc™* fertlizer knives.

905-NRG-5000

This 1/2" Flange Nut is used on disk blade 500-200-1000.

Used with 926-PRG-1250.

Serrated, Grade 5

926-PRG-1250

This Plow Bolt is used on disk blade 500-200-1000.

Used with 905-NRG-5000.

1/2" x 1.25" UNC long shoulder

946-HRG-3754

This 1/2" x 3-3/4" Shoulder Bolt is used on harrow tines 010-HAR-5001ML, 010-HAR-5008ML, 010-HAR-5625ML, 010-HAR-5628ML, 010-HAR-6250ML

Grade 5

961-CRG-1005

This 1/2" x 1" Carriage Bolt is used on disk blade 500-200-1015.

Used with 905-NRG-5000.

Grade 5

Hoses popping out?

Don't forget the hose clip.

This clip eliminates hose movement, as the sharp corners embed into the granular pipe.

See illustration to right for proper installation.

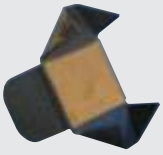

HOSE CLIP
880-HCL-0001

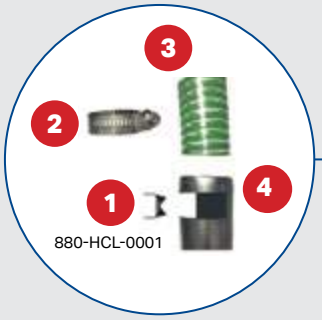

FINAL ASSEMBLY

C-shank

For 600 & 620 Series Openers

- Use 1/2" Hex Head Grade 8 Bolt.
- Blue Loctite is also recommended

Torque Shank Bolts to 120-130 ft/lbs.

For 047-ASY-1000, 610 & 612 Series Openers

- **1" Shanks** use 1/2" x 2" Grade 8 Carriage Bolt (961-CRG-2005)
- **1-1/4" Shanks** use 1/2" x 2-1/4" Grade 8 Carriage Bolt (961-CRG-2255)
- **50° Shanks other than Bourgault or Ezee-On** require a cast wedge adapter (880-WDG-0300 or 880-WDG-0301). See page 114.

When using wedges, different bolt lengths are required

- **1" Shanks** use 1/2" x 2-1/4" Grade 8 Bolt (961-CRG-2255)
- **1-1/4" Shanks** use 1/2" x 2-1/2" Grade 8 Bolt (961-CRG-2505)
- **1/2" Stover Lock Nuts** (906-NPT-5005)

Torque Shank Bolts to 80-100 ft/lbs.

For 047-VRT-1040 & 047-KNH-1000 Openers

- **1" Shanks** use 1/2" x 2" Plow Bolts c/w lock washer and regular nut
- **7/8" and 3/4" Shanks** use 1/2" x 1-3/4" Plow Bolts c/w lock washer and regular nut

Edge On

For Bourgault 3310 & 3320 Edge On Shank, PLS & PLX

- **Use 3/8" x 2-1/4" Grade 8 Carriage Bolts** (960-CRG-3755)
- **Use 3/8" Stover Lock Nut** (906-NPT-3755)

For Morris Maxim Edge On Shank

- **Use 3/8" x 2-1/4" Grade 8 Carriage Bolts** (960-CRG-3755)
- **Use 3/8" Stover Lock Nut** (906-NPT-3755)

For more detailed installation instructions refer to the individual part pages.

Packing Considerations

On-row packing is recommended to achieve good soil to seed contact for even germination. Generally, the packer wheel width should be equal to, or greater than, the width of the tip on the opener. The ideal result is a uniform depth of firm soil over the full seed row.

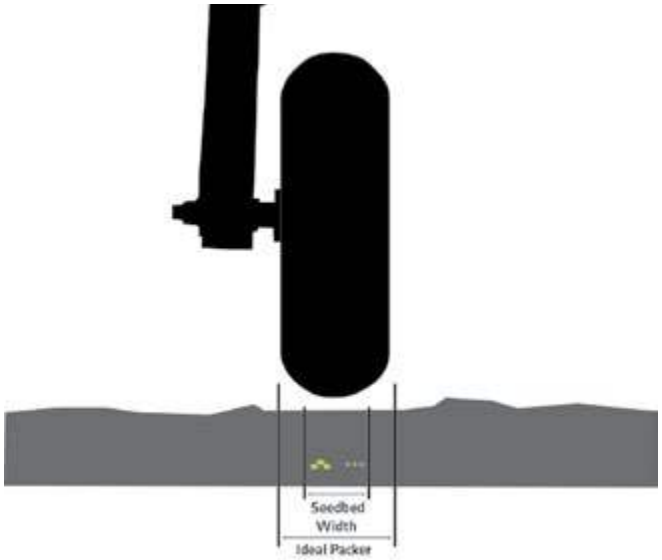

MAX LIFE™ **Weldable Wear Strips** Installation

Always clean the surface that the wear bar will be welded to, ensuring it's as flat and clean as possible. Tack weld the bar into position, then stitch weld in 2" length runs, alternating ends, or similar to minimize heat input.

FOR OUTSIDE CURVES

Tack weld one end of the bar to the surface in at least three places, using a minimum of 1/2" weld in each deposit. Hammer down the unwelded end of the bar to form the curved surface (see top illustration). Stitch weld until the bar is firmly secured.

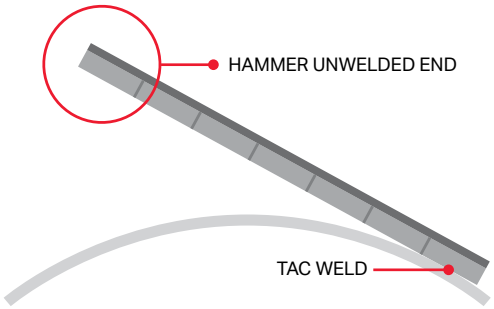

FOR INSIDE CURVES

Tack weld one end of the bar to the surface using a minimum of 1/2" weld in each deposit. Starting from the center, hammer down the bar to form the curved surface (see bottom illustration). Stitch weld until the bar is firmly in place.

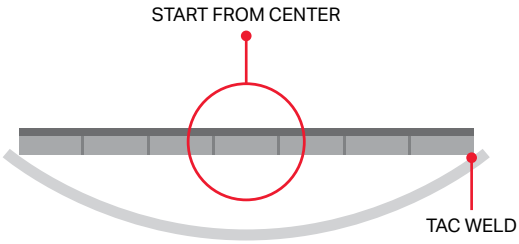

Richmond Brothers Equipment Bolt On Shovel Installation

Clean shank free of dirt and rust. Use 7/16 bolts Grade 5 or higher. Use nylock or stover style lock nuts. For 7" and 9" shovels, ensure that the mounting pads are the ONLY contact point between shank and shovel. Torque spec is 42ft lbs. Re-torque nuts after approximately 200-300 acres. For the best results and performance of our products, ensure that tool is level front to back.

Do not use 1/2" impact driver or larger power tools to install. Abide by torque specification above. Do not let the entire weight of the cultivator rest on shovels while on a hard surface (concrete, frozen ground, etc.).

For further information on installation, handling, and replacements, don't hesitate to contact your local dealer or Richmond Brothers Equipment at 989.453.7097.

Replaceable Tips Installation & Removal

The tongue and groove configuration of replaceable tips allow customers to change tips as they wear out, instead of the whole opener. You can also change tip sizes if conditions change in your operation.

TIP REMOVAL

If a worn out tip is seized on the tongue, you can use two 3lb hammers, one to support the side of the boot and the other to strike the opposite side of the tip to break the side wall.

There are several things to keep in mind when changing or installing new tips:

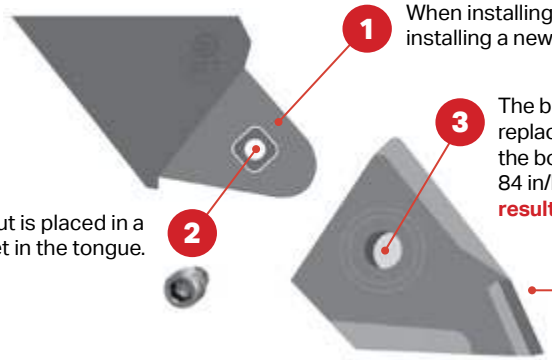

1. When installing new tips it is important to use a new bolt and nut combination. Before installing a new tip, clean the tongue of the holder of any rust or debris with a wire brush.

2. The nut is placed in a pocket in the tongue.

3. The bolt is installed through the hole in the side of the replaceable tip. Turn bolt in by hand until the shoulder of the bolt makes contact with the nut before torquing to 84 in/lbs or 7 ft/lbs (9.5Nm). **NOTE: Over torquing will result in difficulty removing.**

5. When installing a knife on the *Speed-Loc™* adapter, always use the correct driver.

Always wear safety glasses!

Bolt & Nut Part Numbers

DESCRIPTION	SIZE	PART #
Carriage Bolt – Grade 8	3/8" x 1-1/2"	960-CRG-1505
Carriage Bolt – Grade 8	3/8" x 1-3/4"	960-CRG-1755
Carriage Bolt – Grade 8	3/8" x 2-1/4"	960-CRG-3755
Carriage Bolt – Grade 5	1/2" x 1"	961-CRG-1005
Carriage Bolt – Grade 8	1/2" x 2"	961-CRG-2005
Carriage Bolt – Grade 8	1/2" x 2-1/4"	961-CRG-2255
Carriage Bolt – Grade 8	1/2" x 2-1/2"	961-CRG-2505
Carriage Bolt – Grade 8	7/16" x 1-3/4"	962-CRG-1755
Hex Head Bolt	1/4" x 3/4"	942-HRG-0754
Hex Head Bolt	1/4" x 2"	942-HRG-2004
Hex Head Bolt - Grade 8	3/8" x 2"	944-HRG-2005
Hex Head Bolt - Grade 8	7/16" x 1-1/2"	945-HRG-1505
Hex Head Bolt	1/2" x 1-3/4"	946-HRG-1754
Hex Head Bolt	1/2" x 2-3/4"	946-HRG-2754
Hex Head Bolt	1/2" x 3"	946-HRG-3004
Hex Head Bolt	1/2" x 3-1/4"	946-HRG-3254
Hex Head Bolt	1/2" x 3-1/2"	946-HRG-3504
Hex Head Bolt – Grade 8	1/2" x 2"	946-HRG-2005
Hex Head Bolt – Grade 8	1/2" x 2-1/4"	946-HRG-2255
Hex Head Bolt – Grade 8	1/2" x 2-1/2"	946-HRG-2505
Hex Head Bolt – Gr. 5 Shld Blt	1/2" x 3-3/4"	946-HRG-3754
Hex Head Bolt – Grade 8	5/8" x 2-1/2"	948-HRG-2505
Hex Head Bolt – O/S Hd Shld Blt	7/16" x 1-3/4"	933-HOS-1754
Hex Head Bolt – O/S Hd Shld Blt	7/16" x 2"	933-HOS-2004
Lock Nut – Stover	1/4"	906-NPT-2505
Lock Nut – Stover	3/8"	906-NPT-3755
Lock Nut – Stover	7/16"	906-NPT-4375
Lock Nut – Stover	1/2"	906-NPT-5005
Lock Nut – Stover	5/8"	906-NPT-6255

DESCRIPTION	SIZE	PART #
Lock Nut - Nylon Insert	1/4"	908-NNI-2504
Lock Washer	1/2"	902-LWS-5000
Nut – Grade 5	7/16"	904-NRG-4374
Nut – Grade 5	1/2"	904-NRG-5004
Flanged Lock Nut - Grade 5	1/2"	905-NRG-5000
Flanged Lock Nut	3/8"	907-NPF-3755
Flanged Lock Nut	7/16"	907-NPF-4375
Flanged Lock Nut	1/2"	907-NPF-5005
Plow Bolt	1/2" x 1-1/4"	926-PRG-1250
Plow Bolt	1/2" x 1-3/4"	926-PRG-1754
Plow Bolt	1/2" x 2"	926-PRG-2004
Plow Bolt	1/2" x 2-1/4"	926-PRG-2254
Plow Bolt	1/2" x 2-1/2"	926-PRG-2504
Plow Bolt	1/2" x 2-3/4"	926-PRG-2754
Plow Bolt	1/2" x 3"	926-PRG-3004
Plow Bolt	1/2" x 3-1/2"	926-PRG-3504
Plow Bolt – O/S Hd Low Shld	3/8" x 1-1/2"	922-POL-1504
Plow Bolt – O/S Hd Low Shld	3/8" x 1-3/4"	922-POL-1754
Plow Bolt – O/S Hd Low Shld	3/8" x 2"	922-POL-2004
Plow Bolt – O/S Hd	3/8" x 2-1/4"	922-POR-2254
Plow Bolt – O/S Hd Low Shld	7/16" x 1-3/4"	924-POL-1754
Plow Bolt – O/S Hd	7/16" x 2"	924-POR-2004
Plow Bolt – O/S Hd	7/16" x 2-1/4"	924-POR-2254
Plow Bolt – O/S Hd	7/16" x 2-1/2"	924-POR-2504
Plow Bolt – O/S Hd	7/16" x 2-3/4"	924-POR-2754
Plow Bolt – O/S Hd	7/16" x 3"	924-POR-3004
Screw – Pan Head	3/8"	911-SCR-1038
Screw – Self Drill	1/2"	911-SCR-1051

LEGEND: O/S Hd = Oversized Head Low Shld = Low Shoulder Shld Blt = Shoulder Bolt

200-QCA-4700 *Speed-Loc™* Quick Change Adapter

APPLICATION	TOP BOLT	BOTTOM BOLT	SPECIAL NOTES
1" Bourgault shank w/o seed boot	1/2" x 2-1/4" no lock washer	1/2" x 2-1/4" no lock washer	Hex head bolts
1" Bourgault shank w/ round tube Bourgault seed boot	1/2" x 2-1/4" no lock washer	1/2" x 2" no lock washer	Hex head bolts, Grade 8 required
1" Bourgault shank w/ square tube Bourgault seed boot	1/2" x 2" no lock washer	1/2" x 2-1/2" no lock washer	Hex head bolts, Grade 8 required
7/8" Bourgault shank w/o seed boot	1/2" x 2" no lock washer	1/2" x 2" no lock washer	Hex head bolts
7/8" Bourgault shank w/ round tube Bourgault seed boot	1/2" x 2-1/4" no lock washer	1/2" x 2" no lock washer	Hex head bolts, Grade 8 required
7/8" Bourgault shank w/ square tube Bourgault seed boot	1/2" x 2-1/4" no lock washer	1/2" x 2" no lock washer	Hex head bolts, Grade 8 required
3/4" Bourgault shank w/o seed boot	1/2" x 2" no lock washer	1/2" x 2" no lock washer	Hex head bolts
3/4" Bourgault shank w/ round tube Bourgault seed boot	1/2" x 2" c/w with lock washer	1/2" x 1-3/4" no lock washer	Hex head bolts
3/4" Bourgault shank w/ square tube Bourgault seed boot	1/2" x 2-1/4" w/ lock washer	1/2" x 1-3/4" no lock washer	Hex head bolts
3/4" Ezee-On shank w/o seed boot	7/16" x 1-3/4"	7/16" x 1-3/4"	Hex head bolts [3]
7/8" Ezee-On shank w/o seed boot	7/16" x 2"	7/16" x 2"	Hex head bolts [3]

NOTES: 1) Above bolt lengths are determined using prevailing torque side lock nuts – Grade C. This special locknut is necessary to keep the adapter tight. It is very important to use it, especially in stony or hard ground conditions. **2)** Grade 8 bolts are required with the Bourgault 7/8" and 1" shanks where seed boots are involved. If not used, bolt loosening may occur. **3)** Shanks with 7/16" holes require the special oversize (O/S) head hex bolt.

200-QCA-4710 *Speed-Loc™* Quick Change Adapter

APPLICATION	TOP BOLT	BOTTOM BOLT	SPECIAL NOTES
3/4" and 7/8" Flexi-Coil shank w/o seed boot	7/16" x 2-1/4" no lock washer	7/16" x 2-1/4" no lock washer	Plow bolt [2]
7/8" Flexi-Coil shank w/ 5649 seed boot	7/16" x 2-1/2" no lock washer	7/16" x 3-7/8" no lock washer	Plow bolt [2]
1/2" Morris Challenger shank w/o seed boot	3/8" x 1-3/4" no lock washer	3/8" x 1-3/4" no lock washer	Plow bolt [2]
5/8" Morris Challenger shank w/o seed boot	3/8" x 2" no lock washer	3/8" x 2" no lock washer	Plow bolt [2]
7/8" Morris shank w/o seed boot	7/16" x 2-1/4" no lock washer	7/16" x 2-1/4" no lock washer	Plow bolt [2]
9/16" CIL shank w/o seed boot	3/8" x 2" no lock washer	3/8" x 2" no lock washer	Plow bolt [2]
5/8" John Deere shank w/o seed boot	7/16" x 2" no lock washer	7/16" x 2" no lock washer	Plow bolt [2]
3/4" Degelman shank	7/16" x 2-1/4" no lock washer	7/16" x 2-1/4" no lock washer	Plow bolt [2]
9/16" Wil-Rich shank w/o seed boot	1/2" x 2" no lock washer	1/2" x 2" no lock washer	Plow bolt

200-QCA-5010 *Speed-Loc™* Quick Change Adapter

APPLICATION	TOP BOLT	BOTTOM BOLT	SPECIAL NOTES
1" shank w/o seed boot or wedge	1/2" x 2-1/2" w/ lock washer	1/2" x 2-1/2" w/ lock washer	Plow bolt
1-1/4" shank w/o seed boot or wedge	1/2" x 2-3/4" w/ lock washer	1/2" x 2-3/4" w/ lock washer	Plow bolt

NOTES: 1) Above bolt lengths are determined using prevailing torque side lock nuts – Grade C. This special locknut is necessary to keep the adapter tight. **2)** Shanks with 3/8" and 7/16" holes require special oversize (O/S) head plow bolts. **3)** When bolting a seed boot, usually it is the bottom bolt which bolts the seed boot to the shank; the top bolt should remain the same length as listed above. If the seed boot cross section at the point the bolt goes through is 1/8" thick or less, use the same bolt length as above without the lock washer. If the seed boot cross section at the point the bolt goes through is greater than 1/8", increase bolt length by adding the measured cross section of the seed boot at the point the bolt goes through to the above lengths.

410-QCA-5000 *Speed-Loc™* Quick Change Adapter

APPLICATION	TOP HOLE	BOTTOM HOLE	SPECIAL NOTES
1" Bourgault shank w/o seed boot	1/2" x 2-1/2"	1/2" x 2-1/2"	Hex head
1" Bourgault shank w/ Bourgault splitter seed boot 6505-42	1/2" x 2-1/2"	1/2" x 2-3/4"	Hex head
1-1/4" Bourgault shank w/o seed boot	1/2" x 2-3/4"	1/2" x 2-3/4"	Hex head
1-1/4" Bourgault shank w/ Bourgault splitter seed boot 6505-42	1/2" x 2-3/4"	1/2" x 3"	Hex head

410-QCA-5010 *Speed-Loc™* Quick Change Adapter

APPLICATION	TOP HOLE	BOTTOM HOLE	SPECIAL NOTES
1" shank w/o seed boot or wedge	1/2" x 2-1/2"	1/2" x 2-1/2"	Hex head
1-1/4" shank w/o seed boot or wedge	1/2" x 2-3/4"	1/2" x 2-3/4"	Hex head

410-QCA-5080 *Speed-Loc™* Quick Change Adapter

APPLICATION	TOP HOLE	BOTTOM HOLE	SPECIAL NOTES
1-1/4" John Deere shank w/o seed boot or wedge	1/2" x 3"	1/2" x 3"	Hex head

NOTES: 1) Above bolt lengths are determined using prevailing torque side lock nuts – grade C. This special locknut is necessary to keep the adapter tight. **2)** When bolting a seed boot, usually it is the bottom bolt which bolts the seed boot to the shank; the top bolt should remain the same length as listed above. If the seed boot cross section at the point the bolt goes through is 1/8" thick or less, use the same bolt length as above without the lock washer. If the seed boot cross section at the point the bolt goes through is greater than 1/8", increase bolt length by adding the measured cross section of the seed boot at the point the bolt goes through to the above lengths. **3)** When bolting an adapter using a wedge, a wedge will only be used when using the 410-QCA-5010 adapter on 43° and 47° chisel plows. Measure the cross section of the wedge at both bolt holes and add this amount to the above numbers. Remember that the measured cross section will be different at each hole in the wedge.

047 Series Bolt-On Sweeps

Light & Medium-Duty Cultivators

APPLICATION	TOP BOLT	BOTTOM BOLT	SPECIAL NOTES
1" Bourgault shank w/o seed boot	1/2" x 2"	1/2" x 2"	Plow bolts, no lock washer, regular nut
1" Bourgault shank w/ Bourgault round tube seed boot	1/2" x 2"	1/2" x 2"	Plow bolts, no lock washer, regular nut
1" Bourgault shank w/ Bourgault square tube seed boot	1/2" x 2-1/4"	1/2" x 2"	Plow bolts, no lock washer, regular nut
7/8" Bourgault shank w/o seed boot	1/2" x 1-3/4"	1/2" x 1-3/4"	Plow bolts, no lock washer, regular nut
7/8" Bourgault shank w/ Bourgault round tube seed boot	1/2" x 2"	1/2" x 1-3/4"	Plow bolts, no lock washer, regular nut
7/8" Bourgault shank w/ Bourgault square tube seed boot	1/2" x 2-1/4"	1/2" x 1-3/4"	Plow bolts, no lock washer, regular nut
3/4" Bourgault shank w/o seed boot	1/2" x 1-3/4"	1/2" x 1-3/4"	Plow bolts, no lock washer, regular nut
3/4" Bourgault shank w/ Bourgault round tube seed boot	1/2" x 1-3/4"	1/2" x 1-3/4"	Plow bolts, no lock washer, regular nut
3/4" Bourgault shank w/ Bourgault square tube seed boot	1/2" x 2"	1/2" x 1-3/4"	Plow bolts, no lock washer, regular nut
3/4" Degelman shank w/o seed boot	7/16" x 1-3/4"	7/16" x 1-3/4"	Plow bolts, no lock washer, regular nut
7/8" Flexi-Coil shank w/o seed boot	7/16" x 1-3/4"	7/16" x 1-3/4"	Plow bolts, no lock washer, regular nut
1/2" Morris Challenger shank w/o seed boot	3/8" x 1-1/2"	3/8" x 1-1/2"	Plow bolts, no lock washer, regular nut
5/8" Morris Challenger shank w/o seed boot	3/8" x 1-1/2"	3/8" x 1-1/2"	Plow bolts, no lock washer, regular nut
5/8" John Deere shank w/o seed boot	7/16" x 1-1/2"	7/16" x 1-1/2"	Plow bolts, no lock washer, regular nut
9/16" CIL shank w/o seed boot	3/8" x 1-1/2"	3/8" x 1-1/2"	Plow bolts, no lock washer, regular nut
1/2" Case IH shank w/o seed boot	7/16" x 1-1/2"	7/16" x 1-1/2"	Plow bolts, no lock washer, regular nut

043 & 050 Series Bolt-On Sweeps

Heavy-Duty Chisel Plows

APPLICATION	TOP BOLT	BOTTOM BOLT	SPECIAL NOTES
1" Bourgault shank w/o seed boot	1/2" x 2"	1/2" x 2"	Plow bolts, no lock washer, regular nut
1" Bourgault shank w/ Bourgault splitter seed boot #6505-42	1/2" x 2-1/4"	1/2" x 2"	Plow bolts, no lock washer, regular nut
1-1/4" Bourgault shank w/o seed boot	1/2" x 2-1/4"	1/2" x 2-1/4"	Plow bolts, no lock washer, regular nut
1-1/4" Bourgault shank w/ Bourgault splitter seed boot #6505-42	1/2" x 2-1/2"	1/2" x 2-1/4"	Plow bolts, no lock washer, regular nut
1" John Deere shank w/o seed boot	1/2" x 1-3/4"	1/2" x 2"	Plow bolts, no lock washer, regular nut
3/4" Degelman shank (50°) w/o seed boot	1/2" x 1-3/4"	1/2" x 1-3/4"	Plow bolts, no lock washer, regular nut
1-1/4" Flexi-Coil shank w/o seed boot	1/2" x 2-1/4"	1/2" x 2-1/4"	Plow bolts, no lock washer, regular nut
1" Morris shank (43°) w/o seed boot	1/2" x 2"	1/2" x 2"	Plow bolts, no lock washer, regular nut
1-1/4" CIL shank w/o seed boot	1/2" x 2-1/4"	1/2" x 2-1/4"	Plow bolts, no lock washer, regular nut
1-1/4" Case IH shank w/o seed boot	1/2" x 2-1/4"	1/2" x 2-1/4"	Plow bolts, no lock washer, regular nut
3/4" Case IH Vibra shank w/o seed boot	1/2" x 1-3/4"	1/2" x 1-3/4"	Plow bolts, no lock washer, regular nut

NOTES: 1) All Bourgault sweeps come with 1/2" holes. Shanks with 3/8" and 7/16" holes require special oversize (O/S) head plow bolts. **2)** When bolting a seed boot, it's usually the bottom bolt which bolts the seed boot to the shank; the top bolt should remain the same length as listed above. If the seed boot cross section where the bolt goes through is 1/8" thick or less, use the same bolt length as above without the lock washer. If the seed boot cross section where the bolt goes through is greater than 1/8", increase bolt length by adding the measured cross section of the seed boot at the point the bolt goes through to the above lengths.

600 & 602 Series Replacement Tip Fertilizer Knives

APPLICATION	TOP HOLE	BOTTOM HOLE	SPECIAL NOTES
FOR 47° & 50° APPLICATIONS NO WEDGE IS REQUIRED			
1-1/4" Bourgault shank	1/2" x 2-3/4"	1/2" x 2-3/4"	Hex head bolt, regular nut & lock
1" Bourgault shank	1/2" x 2-1/2"	1/2" x 2-1/2"	Hex head bolt, regular nut & lock
7/8" Bourgault shank	1/2" x 2-1/2"	1/2" x 2-1/2"	Hex head bolt, regular nut & lock
3/4" Bourgault shank	1/2" x 2-1/4"	1/2" x 2-1/4"	Hex head bolt, regular nut & lock
1-1/4" Flexi-Coil shank	1/2" x 2-3/4"	1/2" x 2-3/4"	Hex head bolt, regular nut & lock
1-1/4" Morris shank	1/2" x 2-3/4"	1/2" x 2-3/4"	Hex head bolt, regular nut & lock [1]
1" John Deere shank	1/2" x 2-1/2"	1/2" x 2-1/2"	Hex head bolt, regular nut & lock
1-1/4" John Deere shank	1/2" x 2-3/4"	1/2" x 2-3/4"	Hex head bolt, regular nut & lock
3/4" Degelman shank	1/2" x 2-1/4"	1/2" x 2-1/4"	Hex head bolt, regular nut & lock
FOR 43° APPLICATIONS WEDGE 400-WDG-0700 IS REQUIRED			
1" Morris shank for NH3 knives	1/2" x 3" no lock washer	1/2" x 2-3/4" no lock washer	Hex head, regular nut
1" Morris shank for granular knives	1/2" x 3" no lock washer	1/2" x 2-3/4" no lock washer	Hex head, regular nut
1-1/4" CIL shank, 2-1/2" hole center-to-center	1/2" x 3-1/4" c/w no lock washer	1/2" x 2-3/4" no lock washer	Hex head, regular nut
1-1/4" Case IH shank	1/2" x 3-1/4"	1/2" x 3"	Hex head bolt, regular nut & lock [2]
3/4" Case IH Vibra chisel shank	1/2" x 2-3/4"	1/2" x 2-1/2"	Hex head bolt, regular nut & lock

NOTES: 1) Some material may have to be ground off the bottom of the 1-1/4" Morris shank (front face) to get the knife holder to seat down tight against the shank. **2)** The 1-1/4" IH shank will fit the NH3 knives, but not the granular knife. **3)** All knives come with holes to accommodate 1/2" bolts. If cultivator shanks have 7/16" holes, substitute 7/16" bolts for 1/2" and use a flat washer on the bolt head.

Common Torque Values USS/SAE Grade 8

BOLT DIAMETER	TORQUE DRY FT. LBS.	LUBRICATED FT. LBS.
1/4"	**12**	**9**
5/16"	24	18
3/8"	**45**	**35**
7/16"	**70**	**50**
1/2"	**110**	**80**
9/16"	150	110
5/8"	210	160
3/4"	380	280
7/8"	600	450
1"	910	680

This chart lists some of the more common bolt sizes and their calculated torque values. To ensure proper installation and the integrity of the bolts, it is recommended that you follow these values. **All highlighted values are common bolt sizes used for our products.**

Common Torque Values Metric

BOLT DIAMETER	CLASS 10.9		CLASS 12.9	
	TORQUE DRY FT. LBS.	LUBRICATED FT. LBS.	TORQUE DRY FT. LBS.	LUBRICATED FT. LBS.
M4	3.2	2.4	3.8	2.8
M5	6.5	4.9	7.6	5.7
M6	11.1	8.3	13	9.7
M7	18.5	13.9	21.7	16.3
M8	26.9	20.2	31.4	23.6
M10	53.2	39.9	62.2	46.7
M12	92.8	69.6	108.5	81.4
M14	148.4	111.3	173.4	130
M16	230	173	269	202
M18	318	239	372	279

Product Depth Charts

Seed Openers, Fertilizer Knives, Sweeps & Spikes

DEPTH (IN INCHES)						
5	4	3	2	1	0	**PART #**
						047-KNH-1000 / 047-HLD-1000 / 047-ASY-1000
						050-KNH-0500 W/ 200-TIP-0523
						050-KNH-0812 & 0820 W/ 200-TIP-0800
						050-KNH-0812 & 0820 W/ 200-TIP-0801
						050-KNH-0812 & 0820 W/ 200-TIP-1011
						050-KNH-0812 & 0820 W/ 200-TIP-3000
						050-KNH-0812 & 0820 W/ 200-TIP-3001
						050-KNH-0812 & 0820 W/ 200-TIP-3011
						050-KNH-0812 W/ 200-TIP-0800
						050-KNH-0812 W/ 200-TIP-1011
						050-KNH-0820 W/ 200-TIP-0800
						050-KNH-0820 W/ 200-TIP-1011
						200-HOE-1700
						200-KNF-0810 / 0811 / 0813 / 7551 / 7553
						200-KNF-0863 / 0861
						200-KNF-7510 / 7511 / 7512 / 7542
						200-KNF-7520 / 7521 / 7524 / 7525 / 7530 / 7531
						200-KNH-4000 / 4010 & 4020 W/ 200-TIP-0800 / 0801 / 3000 / 3001 / 3011
						200-KNH-4010 W/ 200-TIP-1011
						200-PWV-0400 TO 200-PWV-1200
						200-PWV-0405
						200-PWV-0508 TO 200-PWV-1208
						200-PWV-1300 / 1400
						200-PWV-1308 / 1408
						200-SPN-0200 / 0208 / 0300 / 0308

DEPTH (IN INCHES)						
5	4	3	2	1	0	**PART #**
						200-SPK-0200 / 0215
						200-VRT-1011 / 1000 / 1016 / 1040
						200-VRT-1061
						410-KNF-0800 / 0801 / 0813 / 0824 / 0825
						410-KNF-0830 / 0831 / 7551 / 7553 / 7560
						410-KNH-4000 W/ 200-TIP-0801
						410-KNH-7524 / 7540 W/ 600-TIP-7501
						410-PWV-0418 / 0418ML
						410-PWV-0400 / 0600 / 0608
						410-PWV-0800 / 0808
						410-PWV-1000 / 1008
						410-PWV-1200 / 1208
						410-PWV-1400 / 1408
						410-PWV-1600 / 1608
						410-PWV-1800 / 1808
						410-SPK-0200
						410-SPN-0300 / 0308
						599-KNH-7512 / 7540 W/ 600-TIP-7500 / 7501
						600-KNH-7510 W/ 600-TIP-7501
						600-KNH-7520 W/ 600-TIP-7501
						600-KNH-7530 W/ 600-TIP-7501
						600-KNH-7540 W/ 600-TIP-7501
						600-KNH-7550 W/ 600-TIP-7501
						600-KNH-7562 W/ 600-TIP-7507

047-ASY-1000

Single Shoot Seed Openers (Page 20)

047-ASY-1005P

Single Shoot Seed Openers (Page 20)

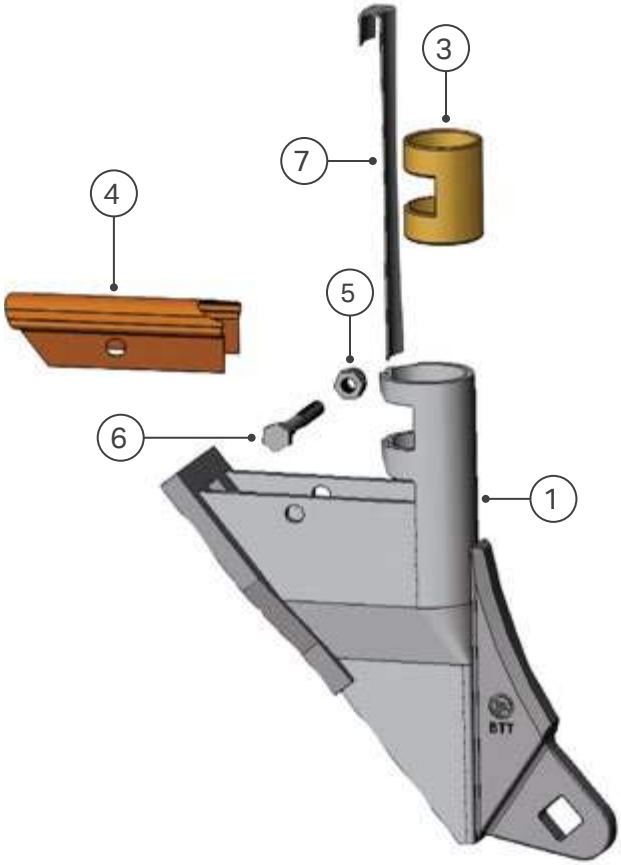

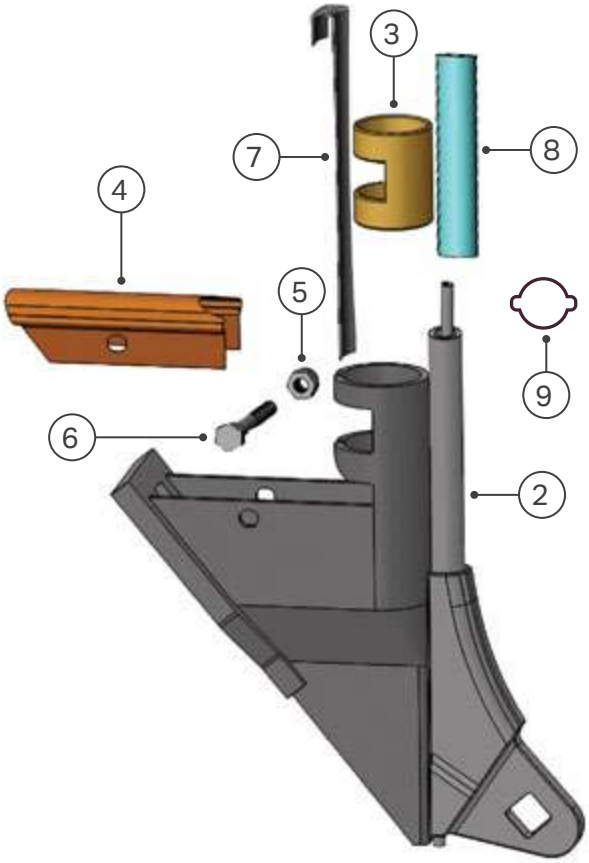

	PART	047-ASY-1000	047-ASY-1005P (P)
1	047-HLD-1000	■	
2	047-HLD-1005P		■
3	880-BSH-1130	■	■
4	047-CAP-1001	■	■
5	908-NNI-2504	■	■
6	942-HRG-2004	■	■
7	047-ACC-1001*	■	■
8	680-HOS-1000**		■
9	880-HCL-0004		■

TIP OPTIONS:

200-TIP-0511	200-TIP-1011
200-TIP-0800	200-TIP-2011
200-TIP-0801	200-TIP-3000
200-TIP-0802	200-TIP-3001
200-TIP-0803	200-TIP-3011
200-TIP-0811	200-TIP-4011

Tips sold separately. See pages 12-13.

NOTES: Curved 50° shanks require either 880-WDG-0300 or 880-WDG-0301. **Sold separately.** See page 114.

*Use focus strip 047-ACC-1000 for more concentrated seed placement.

**680-HOS-1000 is a 6" x 1/2" I.D. NH3 hose.

880-ASY-1010 REQUIRED

This assembly is required to convert the standard 3/16" O.D. liquid phos tube to 1/4" I.D. liquid phos delivery hoses. **Sold separately**.

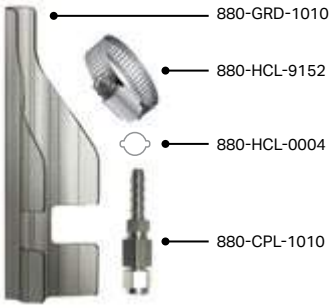

050-MRA-5120 & 5122
050-MRA-5130 & 5151

Bourgault Mid Row Shank Fertilizer Knives

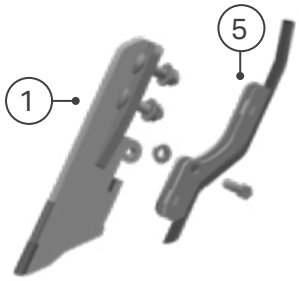

050-MRA-5120

FITS: Bourgault MRS with 1-3/4" bolt spacing (page 32)

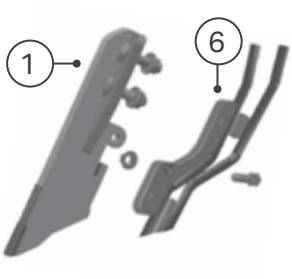

050-MRA-5122

FITS: C-shank with 2-1/4" bolt spacing (page 32)

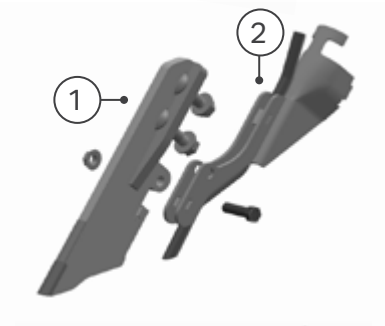

050-MRA-5130

FITS: Bourgault MRS with 1-3/4" bolt spacing (page 32)

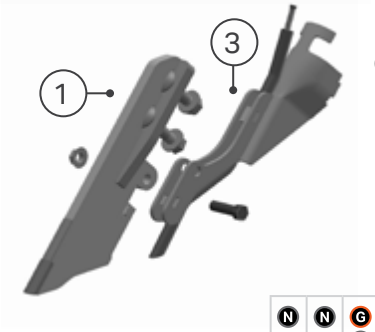

050-MRA-5131

FITS: Bourgault MRS with 1-3/4" bolt spacing (page 32)

050-MRA-5220 & 5222
050-MRA-5230 & 5231

C-Shank Fertilizer Knives

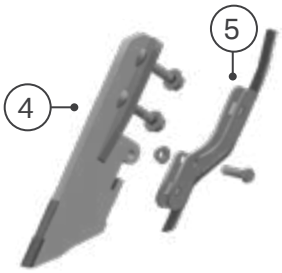

050-MRA-5220

FITS: C-shank with 2-1/4" bolt spacing (page 75)

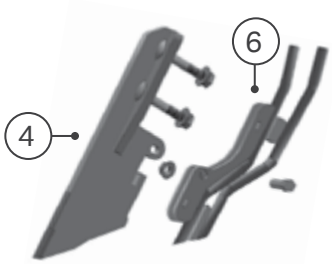

050-MRA-5222

FITS: C-shank with 2-1/4" bolt spacing (page 75)

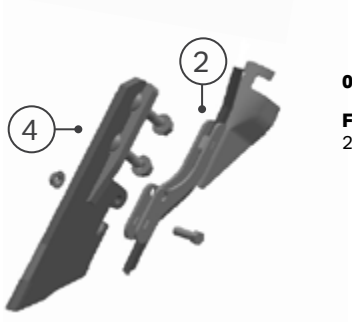

050-MRA-5230

FITS: C-shank with 2-1/4" bolt spacing (page 75)

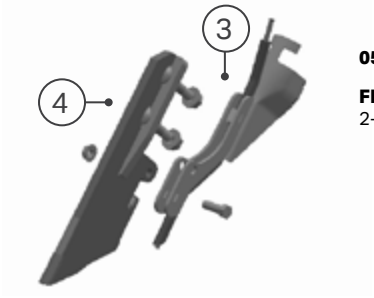

050-MRA-5231

FITS: C-shank with 2-1/4" bolt spacing (page 75)

	PART	050-MRA-5120 (N)	050-MRA-5122 (N)	050-MRA-5130 (G N)	050-MRA-5131 (G L)	050-MRA-5220 (N)	050-MRA-5222 (N)	050-MRA-5230 (G N)	050-MRA-5231 (G L)
1	050-MRH-5175	■	■	■	■				
2	050-MRF-0030			■				■	
3	050-MRF-0031				■				■
4	050-MRH-5225					■	■	■	■
5	050-MRF-0020	■				■			
6	050-MRF-0022		■				■		

Nuts and bolts are included.

All product and company names are trademarks™ or registered® trademarks of their respective holders. Use of them does not imply any affiliation with or endorsement by them.

680-ASY-1000

Single Shoot Seed Openers (Page 28 & 44)

680-ASY-1000P

Single Shoot Seed Openers (Page 28 & 44)

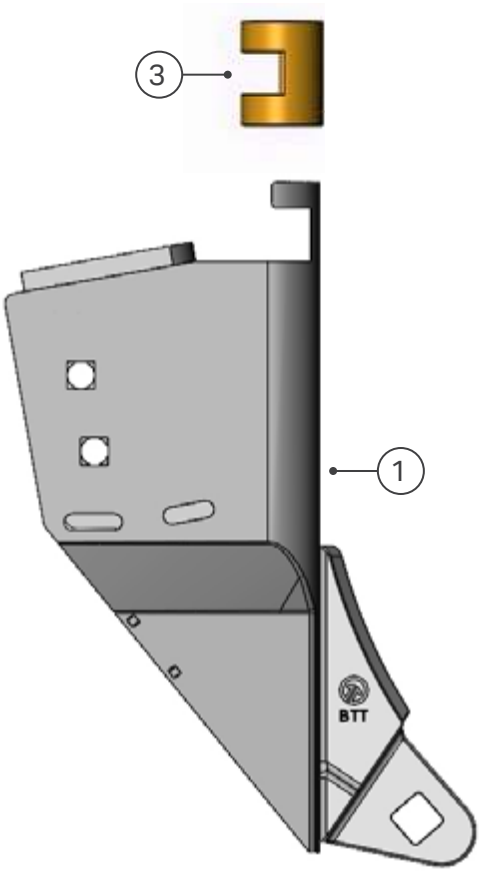

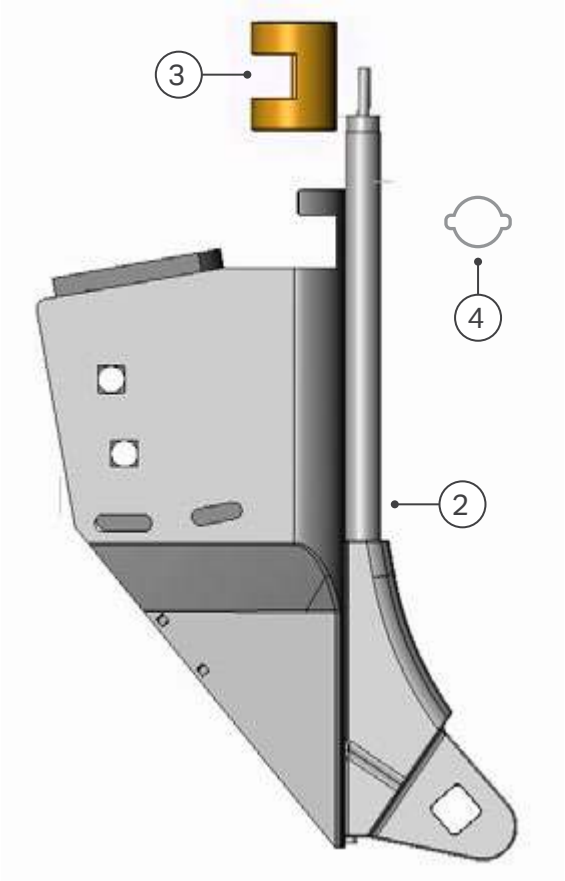

	PART	680-ASY-1000	680-ASY-1000P
1	680-HLD-1000	■	
2	680-HLD-1000P		■
3	880-BSH-1130	■	■
4	880-HCL-0004		■

TIP OPTIONS:

200-TIP-0511	200-TIP-1011
200-TIP-0800	200-TIP-2011
200-TIP-0801	200-TIP-3000
200-TIP-0802	200-TIP-3001
200-TIP-0803	200-TIP-3011
200-TIP-0811	200-TIP-4011

Tips sold separately. See pages 12-13.

200-BNC-3100
907-NPF-3755 & 960-CRG-3755

NOTES: *680-HOS-1000 is a 6" x 1/2" I.D. NH3 hose.

880-ASY-1010 REQUIRED

This assembly is required to convert the standard 3/16" O.D. liquid phos tube to 1/4" I.D. liquid phos delivery hoses. **Sold separately**.

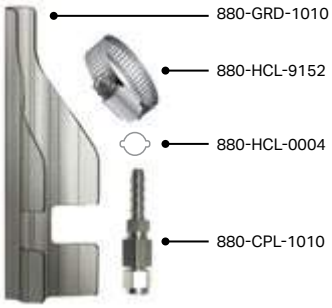

682-ASY-2063/2064

Side Band Seed Openers (Page 31 & 48)

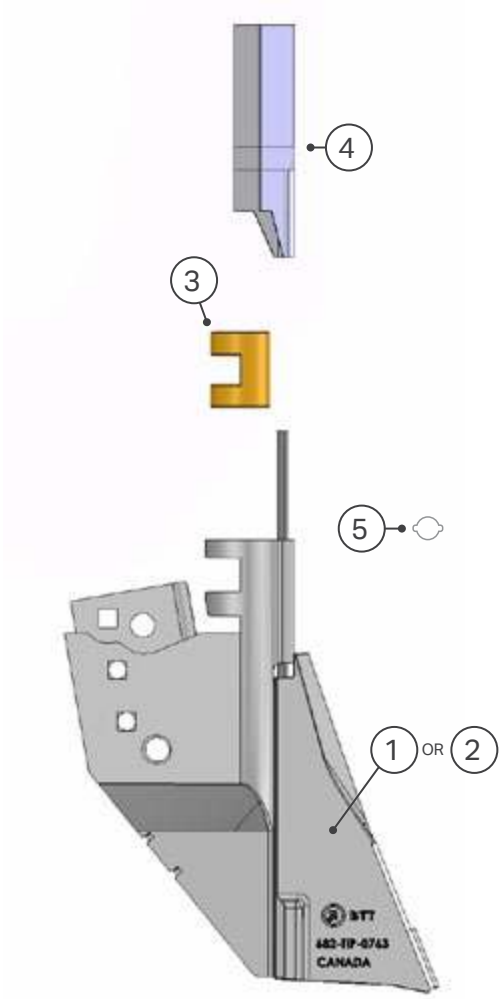

682-ASY-2063 (LEFT)
682-ASY-2064P (RIGHT SHOWN)

	PART	L 682-ASY-2063	L 682-ASY-2064
1	682-KNF-2063	■	
2	682-KNF-2064		■
3	880-BSH-1130	■	■
4	682-DEF-1000	■	■
5	695-HCL-1220	■	■

680-ASY-0211/0212

TriMax™ Triple-Shoot System Seed Openers (Page 31)

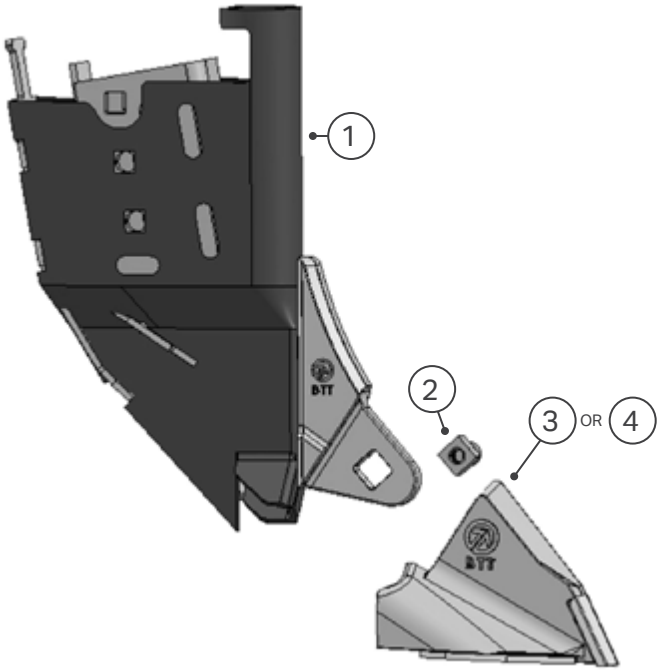

680-ASY-0211 (LEFT)
680-ASY-0212 (RIGHT SHOWN)

	PART	G 680-ASY-0211	G 680-ASY-0212
1	680-HLD-0712	■	
2	200-BNC-3100		■
3	612-TIP-0211	■	
4	612-TIP-0212		■

NOTES:
Accessory 680-ACC-0001 is needed when used for Edge On Concord. See page 114.

610-TIP-4041 Assemblies

Paired Row Seed Openers (Assemblies on these pages include the tip)

	PART	683-ASY-4020G	693-ASY-4020G
1	610-TIP-4041	■	■
2	200-BNC-3100	■	■
3	683-HLD-2000	■	
5	693-HLD-2000		■
6	694-HLD-2000		

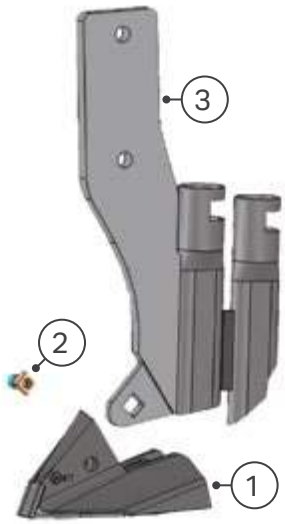

683-ASY-4020G

FITS: Morris Contour I (page 49)

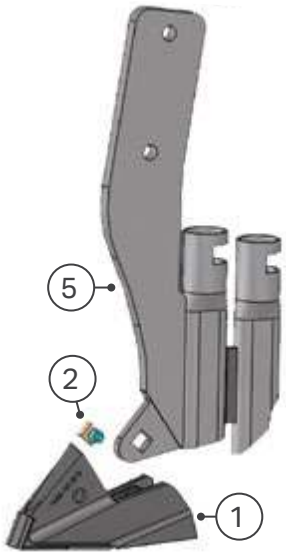

693-ASY-4020G

FITS: Morris Contour II & Morris Quantum (page 49)

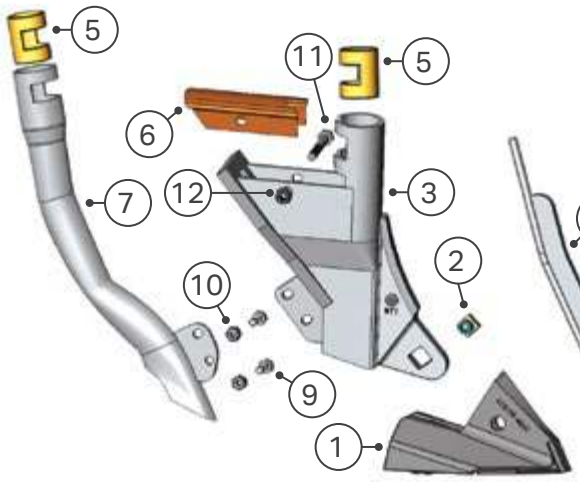

610-ASY-4020

FITS: C-shank (page 22)

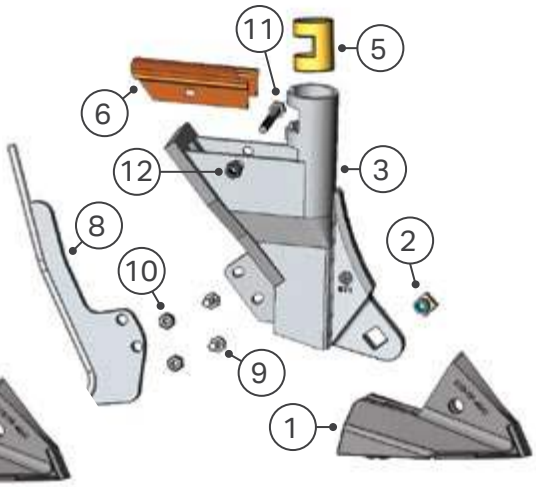

610-ASY-4026

FITS: C-shank (page 22)

	PART	610-ASY-4020	610-ASY-4026
1	610-TIP-4041	■	■
2	200-BNC-3100	■	■
3	610-HLD-2000	■	■
4	680-HLD-2000		
5	880-BSH-1130 (x2)	■	■
6	047-CAP-1000	■	■
7	610-TUB-1001	■	
8	610-TUB-2526		■
9	942-HRG-0754 (x2)	■	■
10	906-NPT-2505 (x2)	■	■
11	942-HRG-2004	■	■
12	908-NNI-2504	■	■

NOTES: Accessory 680-ACC-0004 is a conversion tab needed to replace the fertilizer tube on the 680-HLD-2000, making it a single shoot opener. See page 114.

All product and company names are trademarks™ or registered® trademarks of their respective holders. Use of them does not imply any affiliation with or endorsement by them.

612-TIP-0711 & 0712 Assemblies

Side Band Seed Openers (Assemblies on these pages include the tip)

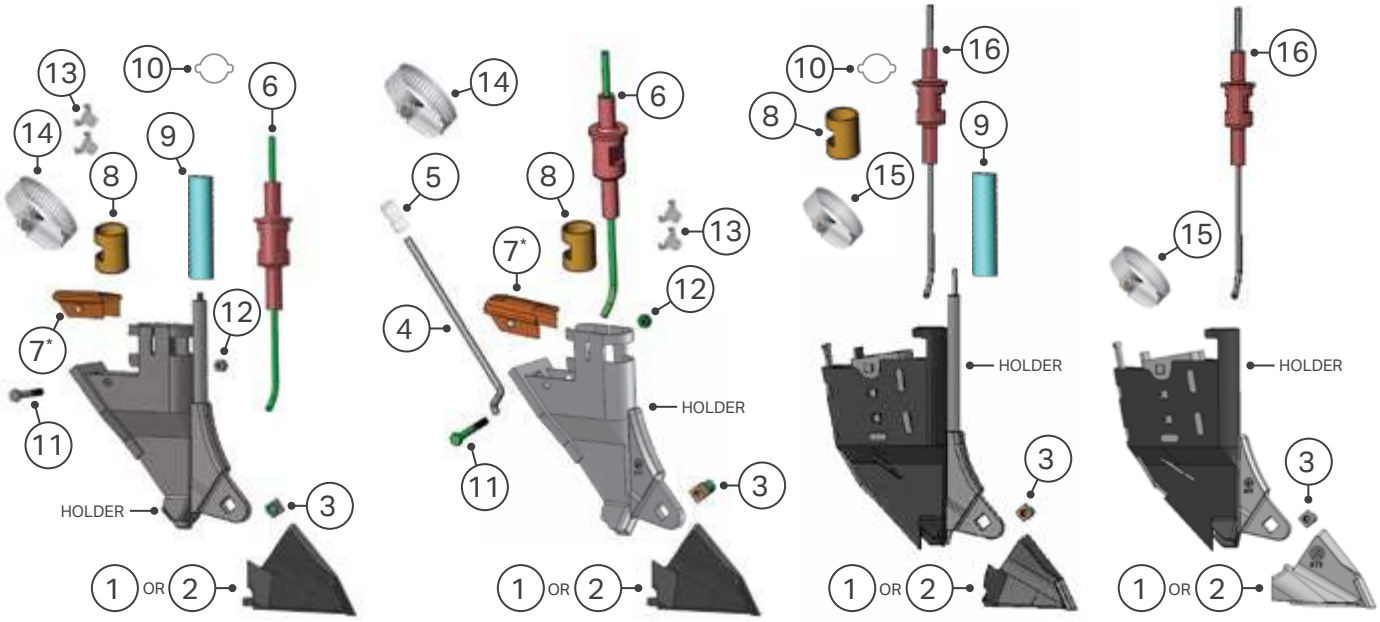

610-ASY-0711
610-ASY-0712 (SHOWN)

HOLDERS:
610-HLD-0711*
610-HLD-0712 (SHOWN)*

FITS: C-shank (page 24)

***BUILD TO ORDER**

612-ASY-0711
612-ASY-0712 (SHOWN)

HOLDERS:
612-HLD-0711
612-HLD-0712 (SHOWN)

FITS: C-shank (page 24)

680-ASY-0711LP
680-ASY-0712LP (SHOWN)

HOLDERS:
680-HLD-0711LP
680-HLD-0712LP (SHOWN)

FITS: Bourgault PHD (page 29)

680-ASY-0711L
680-ASY-0712L (SHOWN)

HOLDERS:
680-HLD-0711L
680-HLD-0712L (SHOWN)

FITS: Bourgault PHD (page 29)

	PART	610-ASY-0711GP (G P)	610-ASY-0711LP (L P)	610-ASY-0712GP (G P)	610-ASY-0712LP (L P)	612-ASY-0711G (G)	612-ASY-0711GP (G P)	612-ASY-0711L (L)	612-ASY-0711LP (L P)	612-ASY-0712G (G)	612-ASY-0712GP (G P)	612-ASY-0712L (L)	612-ASY-0712LP (L P)	680-ASY-0711G (G)	680-ASY-0711GP (G P)	680-ASY-0711L (L)	680-ASY-0711LP (L P)	680-ASY-0712G (G)	680-ASY-0712GP (G P)	680-ASY-0712L (L)	680-ASY-0712LP (L P)
1	612-TIP-0711	■	■			■	■	■	■					■	■	■	■				
2	612-TIP-0712 (SHOWN)			■	■					■	■	■	■					■	■	■	■
3	200-BNC-3100	■	■	■	■	■	■	■	■	■	■	■	■	■	■	■	■	■	■	■	■
4	047-TUB-2540						■		■		■		■								
5	880-CPL-2500						■		■		■		■								
6	612-TUB-6061		■		■			■	■			■	■								
7	612-CAP-1002	■	■	■	■	■	■	■	■	■	■	■	■								
8	880-BSH-1130	■	■	■	■	■	■	■	■	■	■	■	■	■	■			■	■		
9	680-HOS-1000*	■	■	■	■										■		■		■		■
10	880-HCL-0004	■	■	■	■										■		■		■		■
11	942-HRG-2004	■	■	■	■	■	■	■	■	■	■	■	■								
12	908-NNI-2504	■	■	■	■	■	■	■	■	■	■	■	■								
13	880-HCL-0001 (x2)	■		■		■	■			■	■										
14	880-HCL-1828	■	■	■	■	■	■	■	■	■	■	■	■								
15	880-HCL-9152															■	■			■	■
16	682-TUB-6061															■	■			■	■

NOTES: If your C-shank holder looks different than those pictured above, you have a pre-2014 style holder.

These holders require the galvanized steel cap 612-CAP-1001.

614-TIP-2711 & 2712 Assemblies

Side Band Seed Openers (Assemblies on these pages include the tip)

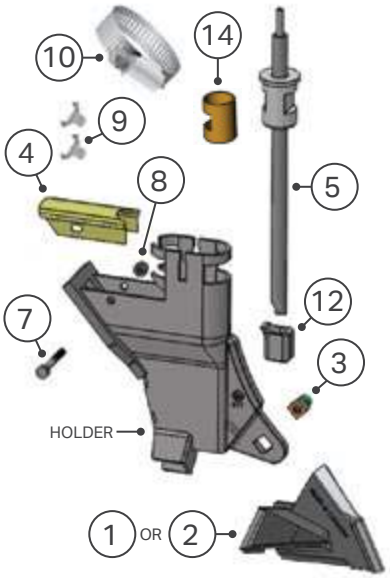

610-ASY-2711 (LEFT)
610-ASY-2712 (RIGHT SHOWN)

HOLDERS:
610-HLD-2711
610-HLD-2712 (SHOWN)

FITS: C-shank (page 23)

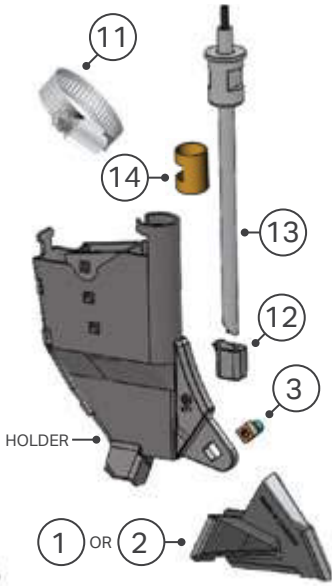

680-ASY-2711 (LEFT)
680-ASY-2712 (RIGHT SHOWN)

HOLDERS:
680-HLD-2711
680-HLD-2712 (SHOWN)

FITS: Edge On, Bourgault PHD (page 29) Morris Maxim (page 47)

683-ASY-2711 (LEFT)
683-ASY-2712 (RIGHT SHOWN)

HOLDERS:
683-HLD-2711
683-HLD-2712 (SHOWN)

FITS: Morris Contour I (page 47)

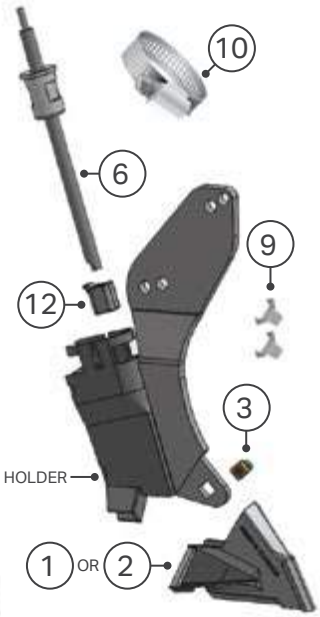

684-ASY-2711 (LEFT)
684-ASY-2712 (RIGHT SHOWN)

HOLDERS:
684-HLD-2711
684-HLD-2712 (SHOWN)

FITS: Case IH 800/900, NH P2070 & 2075, Flexi-Coil PD5700 & 7200 (page 34)

● STANDARD INSTALLATION
● 3° MORE PITCH

	PART	610-ASY-2711G (G)	610-ASY-2711L (L)	610-ASY-2712G (G)	610-ASY-2712L (L)	680-ASY-2711G (G)	680-ASY-2711GP (G P)	680-ASY-2711L (L)	680-ASY-2711LP (L P)	680-ASY-2712G (G)	680-ASY-2712GP (G P)	680-ASY-2712L (L)	680-ASY-2712LP (L P)	683-ASY-2711G (G)	683-ASY-2711GP (G P)	683-ASY-2711L (L)	683-ASY-2711LP (L P)	683-ASY-2712G (G)	683-ASY-2712GP (G P)	683-ASY-2712L (L)	683-ASY-2712LP (L P)	684-ASY-2711G (G)	684-ASY-2711GP (G P)	684-ASY-2711L (L)	684-ASY-2711LP (L P)	684-ASY-2712G (G)	684-ASY-2712GP (G P)	684-ASY-2712L (L)	684-ASY-2712LP (L P)
1	614-TIP-2711	■	■			■	■	■	■					■	■	■	■					■	■	■	■				
2	614-TIP-2712 (SHOWN)			■	■					■	■	■	■					■	■	■	■					■	■	■	■
3	200-BNC-3100	■	■	■	■	■	■	■	■	■	■	■	■	■	■	■	■	■	■	■	■	■	■	■	■	■	■	■	■
4	610-CAP-1080	■	■	■	■																								
5	880-TUB-2701		■		■																								
6	880-TUB-2711															■	■			■	■			■	■			■	■
7	942-HRG-2004	■	■	■	■																								
8	908-NNI-2504	■	■	■	■																								
9	880-HCL-0001 (x2)	■		■										■	■			■	■			■	■			■	■		
10	880-HCL-1828	■	■	■	■									■	■	■	■	■	■	■	■	■	■	■	■	■	■	■	■
11	880-HCL-9152							■	■			■	■																
12	614-ACC-1000		■		■			■	■			■	■			■	■			■	■			■	■			■	■
13	680-TUB-2701							■	■			■	■																
14	880-BSH-1130	■		■																									

NOTES: Two 880-HCL-0001 are included with the granular openers only. They are intended to provide additional security to installed hoses. **See page 115 for proper hose clip installation.** When ordering liquid phos openers call the factory for tube sizes. When installing openers on Case IH 800 & 900, New Holland P2070 & 2075, and Flexi-Coil PD5700 & 7200 you have two options as shown in the diagram above.

All product and company names are trademarks™ or registered® trademarks of their respective holders. Use of them does not imply any affiliation with or endorsement by them.

John Deere 1870 Conserva Pak & P500

Fertilizer Knives (Page 40)

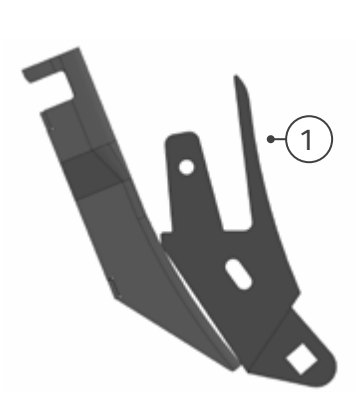

650-HLD-1000G

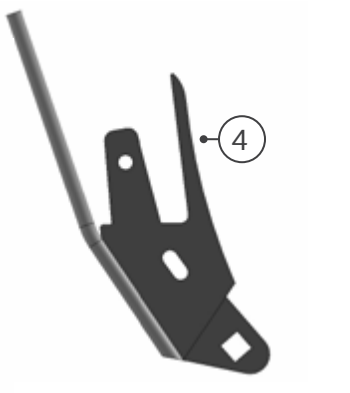

650-HLD-1001

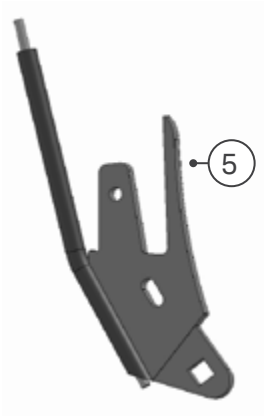

650-HLD-1000L

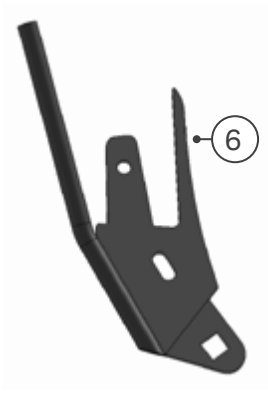

650-HLD-1000N

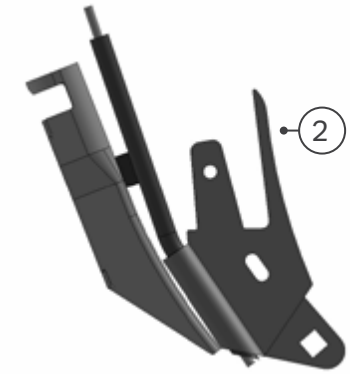

650-HLD-1000GL

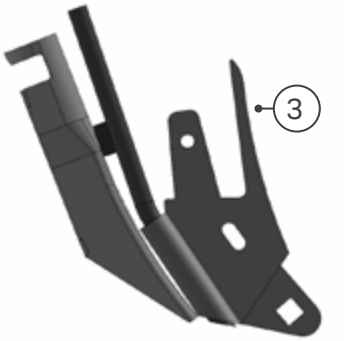

650-HLD-1000GN

	PART	650-HLD-1000G (G)	650-HLD-1000L (L)	650-HLD-1000N (N)	650-HLD-1000GL (G L)	650-HLD-1000GN (G N)	650-HLD-1001 (N)
1	650-HLD-1000G	■					
2	650-HLD-1000GL				■		
3	650-HLD-1000GN					■	
4	650-HLD-1001						■
5	650-HLD-1000L		■				
6	650-HLD-1000N			■			
7	650-ACC-1000[1]	■	■	■			■
8	650-ACC-1010[2]				■	■	

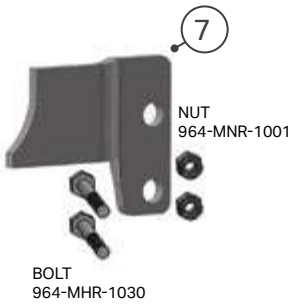

650-ACC-1000

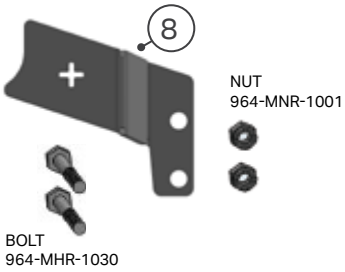

650-ACC-1010

TIP OPTIONS:

200-TIP-0511	200-TIP-0800
200-TIP-0801	200-TIP-0802
200-TIP-0803	200-TIP-0811

Tips sold separately. See pages 12-13.

NOTES: [1]**650-ACC-1000** bracket is required on single fertilizer knives. [2]**650-ACC-1010** bracket is required for 650-HLD-1000GN and 650-HLD-1000GL. Required on units prior to 2017. **They are not included in the assembly and must be ordered separately.**

The metric bolts needed for installation of these bracket are included. Correct bracket installation is shown on page 40.

John Deere 1870 Conserva Pak & P500

Seed Openers (Page 41). Assemblies on this page include the tip.

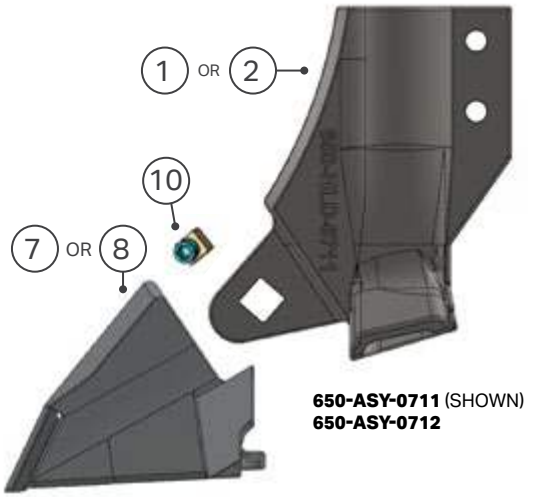

650-ASY-0711 (SHOWN)
650-ASY-0712

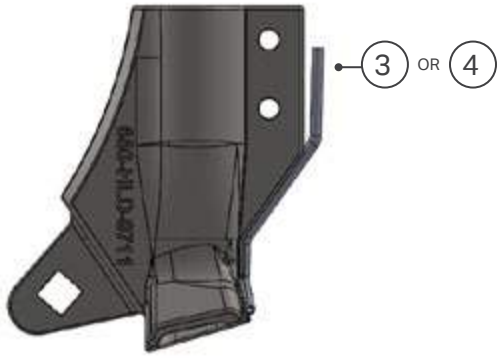

650-ASY-0711P (SHOWN)
650-ASY-0712P

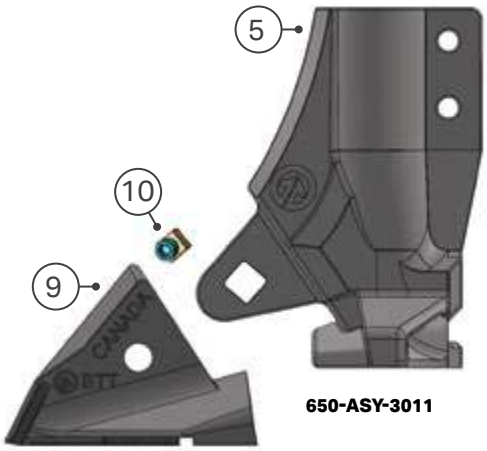

650-ASY-3011

650-ASY-3011P

	PART	G 650-ASY-0711	G 650-ASY-0712	P 650-ASY-0711P	P 650-ASY-0712P	G 650-ASY-3011	P 650-ASY-3011P
1	650-HLD-0711	■					
2	650-HLD-0712		■				
3	650-HLD-0711P			■			
4	650-HLD-0712P				■		
5	650-HLD-3000					■	
6	650-HLD-3000P						■
7	612-TIP-0711 (SHOWN)	■		■			
8	612-TIP-0712		■		■		
9	200-TIP-3011					■	■
10	200-BNC-3100	■	■	■	■	■	■

All product and company names are trademarks™ or registered® trademarks of their respective holders. Use of them does not imply any affiliation with or endorsement by them. John Deere and 1870 Conserva Pak are the registered trademarks of Deere & Company.

John Deere P670 & P680/Seed Master

Fertilizer Knives (Page 42 & 51)

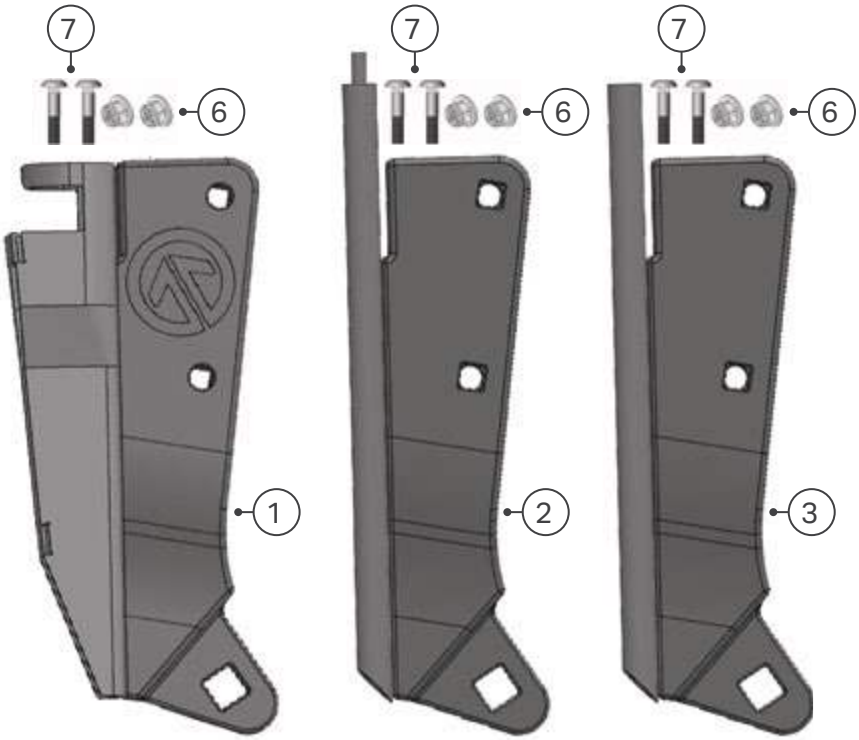

689-HLD-1000G

689-HLD-1000L*

***BUILD TO ORDER**

689-HLD-1000N*

***BUILD TO ORDER**

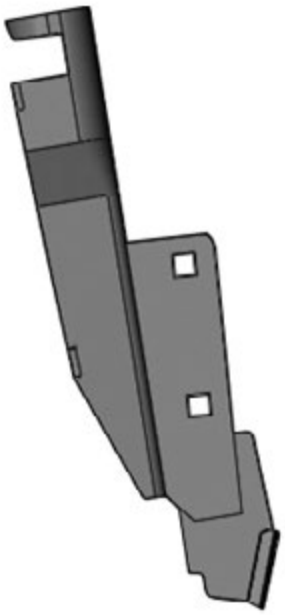

689-KNF-1000

Seeding Knife

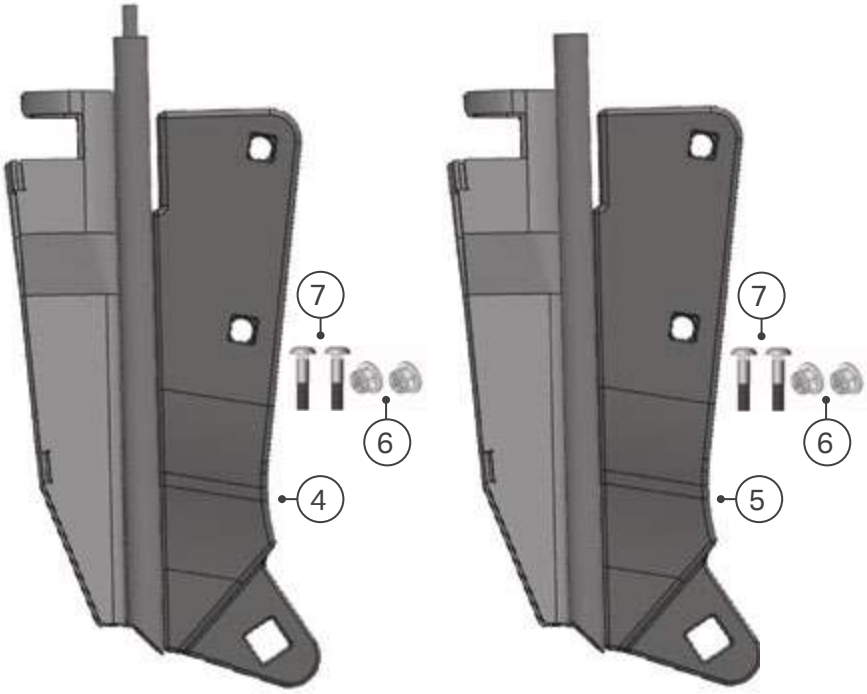

689-HLD-1000GL*

***BUILD TO ORDER**

689-HLD-1000GN*

***BUILD TO ORDER**

	PART	689-HLD-1000G (G)	689-HLD-1000L (L)	689-HLD-1000N (N)	689-HLD-1000GL (G L)	689-HLD-1000GN* (G N)
1	689-HLD-1000G	■				
2	689-HLD-1000L		■			
3	689-HLD-1000N			■		
4	689-HLD-1000GL				■	
5	689-HLD-1000GN*					■
6	907-NPF-3755	■	■	■	■	■
7	960-CRG-1755	■	■	■	■	■

TIP OPTIONS:
200-TIP-0511
200-TIP-0801
200-TIP-0802
200-TIP-0803
200-TIP-0811

Tips sold separately. See pages 12-13.

NOTES: Use 960-CRG-1755 on front shank if installing stainless shield.

Väderstad Seed Hawk

Fertilizer Knives (Page 52) and Seed Openers (Page 54)

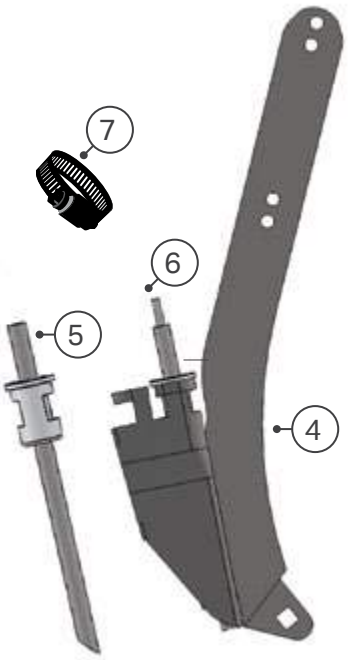

686-HLD-1010GL
686-HLD-1010GN

686-HLD-1020G* **686-HLD-1020L**

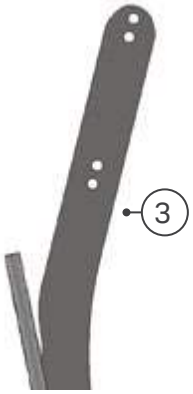

686-HLD-1020N

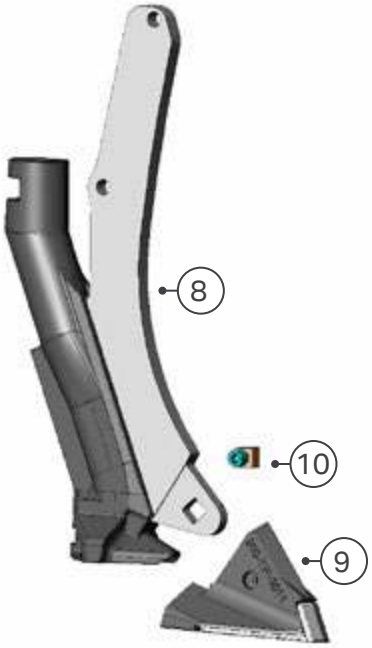

686-ASY-3011
686-ASY-3011P

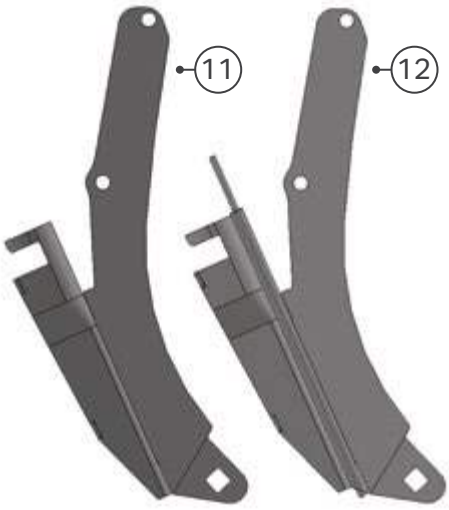

686-KNH-1001 **686-KNH-1001P***

***BUILD TO ORDER**

	PART	686-HLD-1020G (G)	686-HLD-1020L (L)	686-HLD-1020N (N)	686-HLD-1010GL (G L)	686-HLD-1010GN (G N)	686-ASY-3011 (P)	686-KNH-1001 (G)	686-KNH-1001P* (P)
1	686-HLD-1020G	■							
2	686-HLD-1020L		■						
3	686-HLD-1020N			■					
4	686-HLD-1010				■	■			
5	880-TUB-8375					■			
6	880-TUB-8375L				■				
7	880-HCL-1828				■	■			
8	686-HLD-3000						■		
9	200-TIP-3011						■		
10	200-BNC-3100						■		
11	686-KNH-1001							■	
12	686-KNH-1001P*								■

TIP OPTIONS:
200-TIP-0511
200-TIP-0800
200-TIP-0801
200-TIP-0802
200-TIP-0803
200-TIP-0811

Tips sold separately. See pages 12-13.

NOTES: These openers are available with liquid phos options, please call the factory for more details.

*All product and company names are trademarks™ or registered® trademarks of their respective holders. Use of them does not imply any affiliation with or endorsement by them. Väderstad Seedhawk and any other use and/or mentions of their name and/or product designations are the property and registered trademarks of Väderstad Seedhawk.

Titan Opener System

Pages 56-57

1 CHOOSE YOUR **HOLDER**

620-HLD-5000

FITS: 47° and 50 ° C-shank

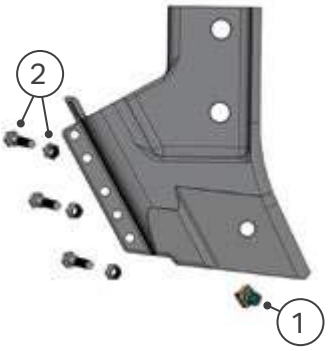

688-HLD-5000

FITS: Horsch 84° Shank, ST and CO

NOTES: On older drills, customer needs to verify mounting bolt holes.

1/2" bolt hole requires **694-HLD-5000** (does not require 694-ACC-1000)

5/8" bolt hole requires **688-HLD-5000**

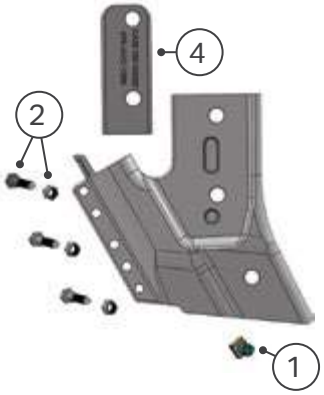

694-HLD-5000

FITS: Case IH AXT 700, NH P2060, Flexi-Coil 5500 & Concord Edge On (84° shanks only)

NOTES: 694-HLD-5000 requires 694-ACC-1000 (included). Not required when installing on the Concord.

	PART	620-HLD-5000	688-HLD-5000	694-HLD-5000
1	200-BNC-3100	■	■	■
2	620-BNC-3100	■	■	■
3	628-BSH-1000			
4	694-ACC-1000			■

All product and company names are trademarks™ or registered® trademarks of their respective holders. Use of them does not imply any affiliation with or endorsement by them.

2 CHOOSE YOUR **SEEDSHOE**

620-SSH-1000

2-3/4" Paired Row

620-SSH-4000

4" Paired Row

620-SSH-6000

6" Paired Row

3 CHOOSE YOUR **TIP**

620-TIP-0510

620-TIP-1510

620-TIP-4060

880-CPL-2500 is required (included).

4 CHOOSE YOUR **FERTILIZER**

N

620-TUB-1021*

1/2" (12mm) O.D. NH3 tube for **620, 688 & 694** holders.

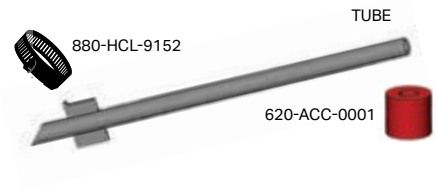

N + P

620-TUB-1070

1/4" (6mm) O.D. Aqua NH3 + Phos tube for **620, 688 & 694** series holders.

N or L

620-TUB-4000

0.4" O.D. Stainless Steel Liquid or NH3 tube for **620, 688 & 694** series holders.

N + P

620-TUB-4040

0.4" O.D. Stainless Steel Aqua NH3 + Phos tube for **620, 688 & 694** series holders.

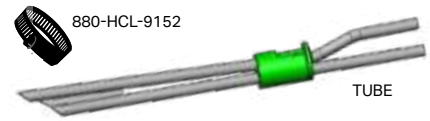

NOTES: The tube assemblies include the tube and any accessories shown.

*For pressurized NH3 Systems (including MaxQuip) you will be given the standard NH3 tube and then must consult with your pressurized system dealer for tubing inserts.

VOS

Pages 58-59

1 CHOOSE YOUR **HOLDER**

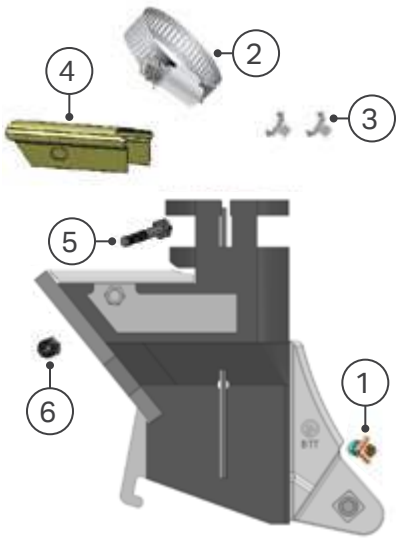

610-HLD-2080HD

FITS: 47° and 50° C-shank

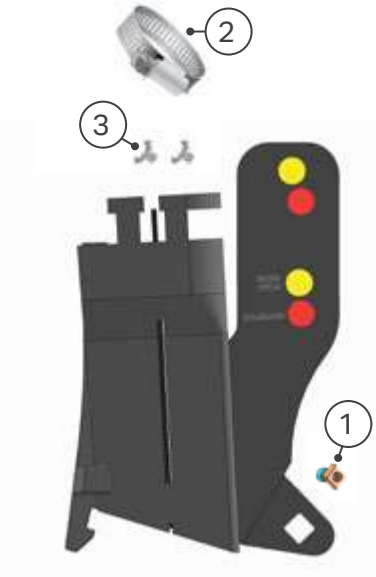

688-HLD-2080

FITS: Horsch 84° Shank, ST and CO

NOTE: When installing openers on Horsch 84° Shanks you have two options shown above.

- STANDARD INSTALLATION
- 4° MORE PITCH

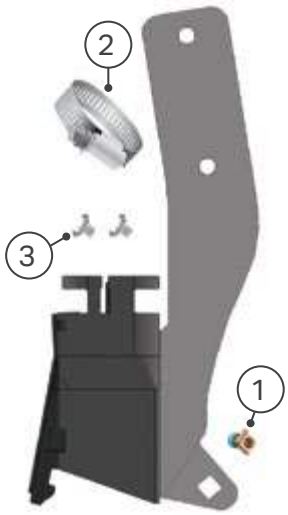

693-HLD-2080

FITS: Morris Contour II and Morris Quantum

	PART	610-HLD-2080HD	688-HLD-2080	693-HLD-2080	694-HLD-2080
1	200-BNC-3100	■	■	■	■
2	880-HCL-1828	■	■	■	■
3	880-HCL-0001 (x2)	■	■	■	■
4	610-CAP-1080	■			
5	942-HRG-2004	■			
6	908-NNI-2504	■			

All product and company names are trademarks™ or registered® of their respective holders. Use of them does not imply any affiliation with or endorsement by them.

2 CHOOSE YOUR **TIP**

610-TIP-0802

Single Shoot Tip

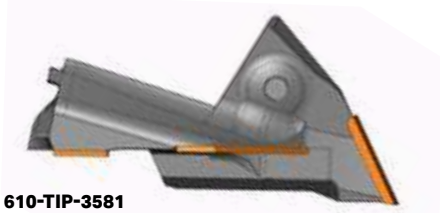

610-TIP-3581

Paired Row Tip

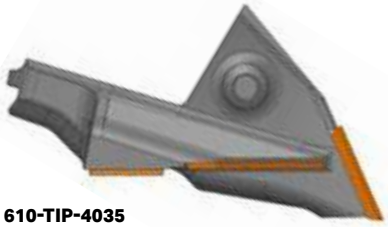
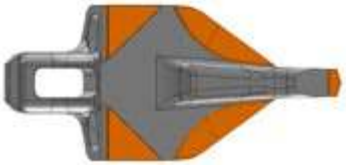

610-TIP-4035

Paired Row Tip

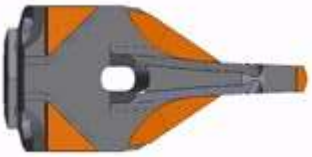

610-TIP-4081

Paired Row Tip

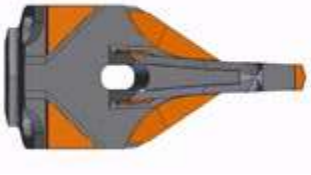

610-TIP-4082

Paired Row Tip

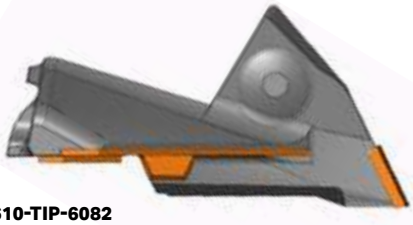
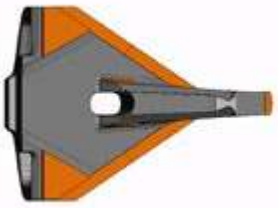

610-TIP-6082

Paired Row Tip

3 CHOOSE YOUR **FERTILIZER**

L

880-TUB-1003[1] / 880-TUB-1004[2]

Precision Drills Liquid 1/4" (6mm) O.D. stainless tube

880-BSH-1000

N or **L**

880-TUB-1009[1] / 880-TUB-1010[2]

Precision Drills Liquid or Aqua NH3 0.40" (10mm) O.D. stainless tube

880-BSH-1000

N + **P**

880-TUB-1011[1] / 880-TUB-1012[2]

Precision Drills Aqua NH3 + Phos 1/4" (6mm) O.D. stainless tube

880-BSH-1003

NOTES: **All tubes come with bushings pictured.**

[1] 880-TUB-1003, 1009 & 1011 are for everything other than C-shank.

[2] 880-TUB-1004, 1010 & 1012 are for C-shank openers, and are 1" longer.

PROPER INSTALLATION:

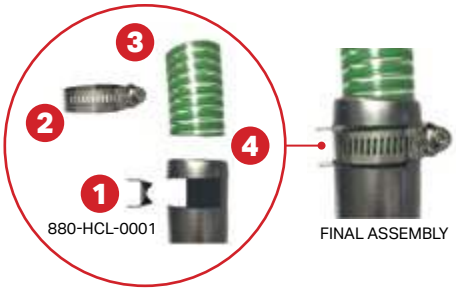

PRODUCT	PAGE
010-BTP-0750	111
010-DEG-1000	97
010-DEG-1001ML	97
010-DEG-5626ML	100
010-DEG-6227ML	100
010-HAR-3814ML	99
010-HAR-3817ML	99
010-HAR-3818ML	99
010-HAR-3819ML	99
010-HAR-4309ML	99
010-HAR-4375ML	99
010-HAR-5000ML	99
010-HAR-5001ML	99
010-HAR-5008ML	99
010-HAR-5020ML	99
010-HAR-5022ML	99
010-HAR-5024ML	99
010-HAR-5027ML	100
010-HAR-5028ML	100
010-HAR-5029ML	100
010-HAR-5625ML	100
010-HAR-5627ML	100
010-HAR-5628ML	100
010-HAR-6230ML	100
010-HAR-6250ML	100
010-PHT-9010	112
010-PHT-9015	112
010-WWS-0662	110
010-WWS-1202	110
010-WWS-1509	110
010-WWS-2506	110
010-WWS-9520	110
015-JDS-2680	97
015-SRC-0001	97
015-SRC-0004	97
030-HLD-2000	91
043-PWV-0800	90
043-PWV-1000	90
043-PWV-1200	90
043-PWV-1400	90
043-PWV-1600	90
043-PWV-1800	90
047-ACC-1001	114
047-ACC-1002	114
047-ASY-1000	20, 123
047-ASY-1005P	20, 123
047-CAP-1001	114
047-KNH-1000	20
047-PWV-0400	90
047-PWV-0708	90
047-PWV-0900	90
047-PWV-0908	90
047-PWV-1000	90
047-PWV-1008	90
047-PWV-1100	90
047-PWV-1200	90
047-PWV-1300	90
047-PWV-1308	90
047-VRT-1040	20
050-KNH-0812	21
050-KNH-0820	72
050-PWV-0600	90
050-PWV-0800	90
050-MRA-5120	32, 75, 124
050-MRA-5122	32, 75, 124
050-MRA-5130	32, 75, 124

PRODUCT	PAGE
050-MRA-5131	32, 75, 124
050-MRA-5220	75, 124
050-MRA-5222	75, 124
050-MRA-5230	75, 124
050-MRA-5231	75, 124
050-MRF-0020	124
050-MRF-0022	124
050-MRF-0030	124
050-MRF-0031	124
050-MRH-5175	124
050-MRH-5225	124
050-PWV-1000	90
050-PWV-1200	90
050-PWV-1400	90
050-PWV-1600	90
050-PWV-1608	90
050-PWV-1800	90
070-RCH-0451	91
070-RCH-0451ML	92
070-RCH-0452	91
070-RCH-0452ML	92
070-RSP-0200A	91
070-RSP-0210A	91
070-RSP-0220A	91
100-DRV-1010	80
100-DRV-1020	80
100-HAM-4000	80
100-WDG-0700	114
200-ASY-0001	115
200-ASY-7523	71
200-BNC-3100	13, 115
200-DRV-1013	80
200-DRV-1030	80
200-GFO-0308	87
200-HOE-1700	60
200-KNF-0810	60
200-KNF-0811	60
200-KNF-0813	60
200-KNF-0863	61
200-KNF-7501	61
200-KNF-7511	61
200-KNF-7521	68
200-KNF-7525	68
200-KNF-7531	68
200-KNH-4000	62
200-KNH-4010	62
200-KNH-4020	71
200-PWV-0400	86
200-PWV-0405	87
200-PWV-0405ML	87, 92
200-PWV-0428	87
200-PWV-0500	86
200-PWV-0508	86
200-PWV-0528	87
200-PWV-0700	86
200-PWV-0708	86
200-PWV-0900	86
200-PWV-0908	86
200-PWV-0928	87
200-PWV-1000	86
200-PWV-1008	86
200-PWV-1100	86
200-PWV-1108	86
200-PWV-1200	86
200-PWV-1208	86
200-PWV-1300	86

PRODUCT	PAGE
200-PWV-1308	86
200-PWV-1400	86
200-PWV-1408	86
200-PWV-1608	86
200-PWV-1808	86
200-QCA-4700	78
200-QCA-4710	78
200-QCA-5000	78
200-QCA-5010	78
200-QCA-5020	78
200-QCA-5030	78
200-REL-1010	80
200-SLC-1001	80
200-SLC-1010	80
200-SLC-1020	80
200-SLC-1030	80
200-SLC-1035	80
200-SLC-1037	80
200-SLC-1038	80
200-SLC-1039	80
200-SPK-0200	87
200-SPK-0200ML	87, 92
200-SPK-0215	87
200-SPK-0230	87
200-SPN-0200	63
200-SPN-0208	63
200-SPN-0300	63
200-SPN-0308	63
200-TIP-0511	12
200-TIP-0800	12
200-TIP-0801	12
200-TIP-0802	12
200-TIP-0803	12
200-TIP-0811	12
200-TIP-1011	12
200-TIP-2011	12
200-TIP-3000	13
200-TIP-3001	13
200-TIP-3011	13
200-TIP-4011	13
200-VRT-1040	63
200-WDG-0206	114
200-WDG-0506	114
200-WDG-1000	114
200-WDG-1006	114
300-ATM-1000	65
300-ATM-1006	65
300-ATM-1010	65
300-ATM-1020	65
300-ATM-1031	65
300-ATM-1035	65
300-ATM-1036	65
300-BNC-4414	65, 115
300-BSH-1200	114
300-HLD-4700	64
300-HLD-4710	64
300-HLD-5000	64
300-HLD-5010	64
300-SQR-1500	65
300-SQR-1505	65
333-ASY-0711	27
333-ASY-0712	27
333-ASY-3011	27
333-KNF-0511	27
333-KNF-0512	27
333-KNF-1000	26

PRODUCT	PAGE
333-KNF-1010	26
333-KNF-2000	26
333-KNF-2020	26
400-DRV-1000	80
400-DRV-1010	80
400-WDG-0300	114
400-WDG-0700	114
410-ASY-0823	71
410-ASY-7523	71
410-KNF-0801	62
410-KNF-0825	69
410-KNF-0826	69
410-KNF-0827	69
410-KNF-0831	69
410-KNF-0835	69
410-KNF-7551	70
410-KNF-7553	70
410-KNF-7540	70
410-KNF-7560	70
410-KNH-7524	70
410-KNH-7526	70
410-PWV-0400	88
410-PWV-0418	89
410-PWV-0418ML	89, 92
410-PWV-0518	89
410-PWV-0600	88
410-PWV-0608	88
410-PWV-0800	88
410-PWV-0808	88
410-PWV-1000	88
410-PWV-1008	88
410-PWV-1200	88
410-PWV-1208	88
410-PWV-1400	88
410-PWV-1408	88
410-PWV-1600	88
410-PWV-1608	88
410-PWV-1808	88
410-QCA-5000	79
410-QCA-5010	79
410-QCA-5020	79
410-QCA-5060	79
410-QCA-5080	79
410-SLC-1001	80
410-SLC-1022	80
410-SLC-1030	80
410-SLC-1050	80
410-SPK-0200	89
410-SPK-0200ML	89, 92
410-SPN-0300	63
410-SPN-0308	63
500-200-1000	103
500-200-1005	103
500-200-1010	105
500-200-1015	103
500-200-1020	106
500-200-1025	103
500-200-1030	108
505-200-1000	106
505-200-1005	107
505-200-1010	107
505-200-1015	107
505-200-1020	107
505-200-1025	108
510-200-1000	105
511-200-1000	105

PRODUCT	PAGE
515-200-1000	108
517-200-1005	104
517-200-1010	104
517-200-1015	107
517-200-1017	107
517-200-1020	104, 107
517-200-1025	104
517-200-1030	105
521-200-1000	108
522-200-1000	106
522-200-1005	106
522-200-1010	104
522-200-1020	104
522-200-1025	105
522-200-1030	105
522-200-1035	106
522-200-1040	106
599-KNH-7540	21, 72
600-BNC-5000	17, 115
600-HHA-0750	114
600-TIP-7500	17
600-TIP-7501	17
600-TIP-7502	17
600-TIP-7507	17
602-ASY-7523	72
602-HLD-7500	72
602-KNH-7520	72
602-KNH-7530	73
602-KNH-7531	73
602-KNH-7540	73
602-KNH-7552	73
602-KNH-7554	73
602-KNH-7585	74
602-KNH-7586	74
602-KNH-7587	74
602-KNH-7640	74
610-ASY-0711GP	24, 128
610-ASY-0711LP	24, 128
610-ASY-0712GP	24, 128
610-ASY-0712LP	24, 128
610-ASY-2711G	23, 129
610-ASY-2711L	23, 129
610-ASY-2712G	23, 129
610-ASY-2712L	23, 129
610-ASY-4020	22, 127
610-ASY-4026	22, 127
610-CAP-1080	136
610-HLD-0711	128
610-HLD-0712	128
610-HLD-2080HD	25, 58, 136
610-HLD-2711	129
610-HLD-2712	129
610-TIP-0802	13, 58, 137
610-TIP-3581	15, 58, 137
610-TIP-4030	14
610-TIP-4035	14, 59, 137
610-TIP-4041	14, 127
610-TIP-4081	15, 59, 137
610-TIP-4082	15, 59, 137
610-TIP-4085	15, 59
610-TIP-6082	15, 59, 137
612-ASY-0711	24, 128
612-ASY-0711P	24, 128
612-ASY-0711L	24, 128
612-ASY-0711LP	24, 128
612-ASY-0712	24, 128
612-ASY-0712P	24, 128

PRODUCT	PAGE
612-ASY-0712L	24, 128
612-ASY-0712LP	24, 128
612-HLD-0711	128
612-HLD-0712	128
612-TIP-0211	16, 126
612-TIP-0212	16, 126
612-TIP-0711	16, 128
612-TIP-0712	16, 128
614-ACC-1000	114
614-TIP-2711	16, 129
614-TIP-2712	16, 129
620-ACC-0001	135
620-BNC-3100	134
620-HLD-5000	25, 56, 134
620-SSH-1000	56, 134
620-SSH-4000	56, 134
620-SSH-6000	56, 134
620-TIP-0510	57, 135
620-TIP-1510	57, 135
620-TIP-4060	57, 135
620-TUB-1021	57, 135
620-TUB-1070	57, 135
620-TUB-4000	57, 135
620-TUB-4040	57, 135
650-ACC-1000	40, 114, 130
650-ACC-1010	40, 114, 130
650-ASY-0711	41, 131
650-ASY-0711P	41, 131
650-ASY-0712	41, 131
650-ASY-0712P	41, 131
650-ASY-3011	41, 131
650-ASY-3011P	41, 131
650-HLD-1000G	40, 130
650-HLD-1000GL	40, 130
650-HLD-1000GN	40, 130
650-HLD-1000L	40, 130
650-HLD-1000N	40, 130
650-HLD-1001	40, 130
670-ASY-7523	50, 76
670-HLD-1000	50, 76
670-HLD-1000G	50, 76
670-HLD-1000GN	50, 76
670-HLD-1000GL	50, 76
670-HLD-1000HG	50, 76
670-HLD-1000L	50, 76
670-HLD-1000N	50, 76
674-ASY-7523	76
674-HLD-7520	76
674-HLD-7530	76
680-ACC-0001	114
680-ACC-0004	114
680-ACC-1000	114
680-ASY-0211	31, 126
680-ASY-0212	31, 126
680-ASY-0711G	29, 46, 128
680-ASY-0711GP	29, 46, 128
680-ASY-0711L	29, 46, 128
680-ASY-0711LP	29, 46, 128
680-ASY-0712G	29, 46, 128
680-ASY-0712GP	29, 46, 128
680-ASY-0712L	29, 46, 128
680-ASY-0712LP	29, 46, 128
680-ASY-1000	28, 44, 125
680-ASY-1000P	28, 44, 125
680-ASY-2711G	30, 47, 129
680-ASY-2711GP	30, 47, 129
680-ASY-2711L	30, 47, 129

PRODUCT	PAGE
680-ASY-2711LP	30, 47, 129
680-ASY-2712G	30, 47, 129
680-ASY-2712GP	30, 47, 129
680-ASY-2712L	30, 47, 129
680-ASY-2712LP	30, 47, 129
680-HLD-0711L	128
680-HLD-0711LP	128
680-HLD-0712L	128
680-HLD-0712LP	128
680-HLD-1000	28, 42
680-HLD-1000P	28, 42
680-HLD-2711	129
680-HLD-2712	129
680-HOS-1000	123
680-KNF-5000	28
680-TUB-2701	129
682-ASY-2063	31, 48, 126
682-ASY-2064	31, 48, 126
683-ASY-1000P	45
683-ASY-2711G	47, 129
683-ASY-2711GP	47, 129
683-ASY-2711L	47, 129
683-ASY-2711LP	47, 129
683-ASY-2712G	47, 129
683-ASY-2712GP	47, 129
683-ASY-2712L	47, 129
683-ASY-2712LP	47, 129
683-ASY-4020G	49, 127
683-HLD-2711	129
683-HLD-2712	129
683-KNH-1000	45
684-ASY-2711G	34, 129
684-ASY-2711GP	34, 129
684-ASY-2711L	34, 129
684-ASY-2711LP	34, 129
684-ASY-2712G	34, 129
684-ASY-2712GP	34, 129
684-ASY-2712L	34, 129
684-ASY-2712LP	34, 129
684-HLD-2711	129
684-HLD-2712	129
684-KNH-1010	33
686-ASY-3011	54, 133
686-ASY-3011P	54, 133
686-HLD-1010GL	53, 133
686-HLD-1010GN	53, 133
686-HLD-1020G	53, 133
686-HLD-1020L	53, 133
686-HLD-1020N	53, 133
686-KNH-1001	54, 133
686-KNH-1001P	54, 133
686-KNH-5010	54
686-KNH-5010P	54
686-KNH-5020G	52
686-KNH-5020GL	52
686-KNH-5020GN	52
686-KNH-5020L	52
686-KNH-5020N	52
688-HLD-1000	37
688-HLD-2000	38
688-HLD-2080	39, 58, 136
688-HLD-5000	38, 56, 134
689-HLD-1000G	51, 132
689-HLD-1000GL	51, 132
689-HLD-1000GN	51, 132
689-HLD-1000L	51, 132
689-HLD-1000N	51, 132

PRODUCT	PAGE
689-KNF-1000	51
693-ASY-1000P	45
693-ASY-4020G	49, 127
693-HLD-2080	48, 58, 136
693-KNH-1000	45
694-ACC-1000	114
694-HLD-5000	35, 56, 134
694-KNH-1000	33
702-DEG-0012	111
810-CPP-0200	93
810-CPP-0750	93
810-SIH-0700	93
810-SIH-0900	93
810-SJD-0700	93
810-SJD-0900	93
810-SKG-0275	93
810-SKG-0400	93
815-RIH-0300	94
815-RIH-0500	94
815-RIH-0700	94
815-RIH-1000	94
815-RIH-1400	94
815-RJD-0300	94
815-RJD-0500	95
815-RJD-0700	95
815-RJD-1000	95
815-RJD-1400	95
815-RNW-0010	96
815-RNW-0011	96
815-RNW-0020	96
815-RSS-0010	96
815-RSS-0020	96
815-RSS-0030	96
815-RSS-0040	96
880-ASY-1010	114, 123, 125
880-BAR-3750	114
880-BSH-1000	114, 137
880-BSH-1003	59, 114, 137
880-BSH-1130	114
880-BSH-1150	114
880-BSH-1170	114
880-BSH-2000	115
880-CPL-1010	115
880-CPL-2500	115
880-GRD-1000	115
880-GRD-1010	115
880-HCL-0001	115
880-HCL-0004	115
880-ORF-0001	115
880-TUB-1003	59, 137
880-TUB-1004	59, 137
880-TUB-1009	59, 137
880-TUB-1010	59, 137
880-TUB-1011	59, 137
880-TUB-1012	59, 137
880-TUB-2701	129
880-TUB-2711	129
880-WDG-0300	114
880-WDG-0301	114
905-NRG-5000	115, 118
906-NPT-3755	118
907-NPF-3755	118
926-PRG-1250	115, 118
944-HRG-2005	118
945-HRG-1505	118
946-HRG-3754	115, 118
961-CRG-1005	115, 118

F. P. BOURGAULT TILLAGE TOOLS LTD.

Since 1991

PO Box 310
200 – 5th Avenue South
St. Brieux, SK, Canada
S0K 3V0
P 800.878.7714
F 306.275.4720

tillagetools.ca

SCAN TO VIEW OUR CATALOGUE ONLINE

2023 ©F.P. Bourgault Tillage Tools Ltd. Bourgault Tillage Tools, BTT™, Speed-Loc™, Max Life™, Blue Armour™, the Bourgault Tillage Tools logo, Bourgault Tillage Tools product designations, and all other related marks, images and symbols are the exclusive properties and/or registered trademarks of F.P. Bourgault Tillage Tools Ltd.

Bourgault Tillage Tools has made every attempt to accurately portray our product lineup. However, due to our commitment to continually innovating our technologies to provide our customers with the best possible products, some products may not be manufactured exactly as shown.

Printed in Canada (09/2023)

BTT